ALIENWARE® M17x
SERVICE MANUAL

Notes, Cautions, and Warnings

NOTE: A NOTE indicates important information that helps you make better use of your computer.

CAUTION: A CAUTION indicates either potential damage to hardware or loss of data and tells you how to avoid the problem.

WARNING: A WARNING indicates a potential for property damage, personal injury, or death.

The contents herein are subject to change without notice.

© 2010 Dell Inc. All rights reserved.

Reproduction of these materials in any manner whatsoever without the prior written permission of Dell Inc. is strictly prohibited.

Trademarks used in this manual: *Alienware* is a registered trademark of Alienware Corporation; *Dell* and the *Dell* Logo are trademarks of Dell Inc.; *Bluetooth* is a registered trademark owned by Bluetooth SIG, Inc. and is used by Dell under license; *Microsoft*, *Windows*, and the *Windows* start button logo are either trademarks or registered trademarks of Microsoft Corporation in the United States and/or other countries; *Phoenix FailSafe* is a trademark of Phoenix Technologies Ltd.

Other trademarks and trade names may be used in this manual to refer to either the entities claiming the marks and names or their products. Dell Inc. disclaims any proprietary interest in trademarks and trade names other than its own.

Rev. A00 **March 2010**

CONTENTS

CHAPTER 1: BEFORE YOU BEGIN 6
Recommended Tools 7
Turning Off Your Computer 7
Before Working Inside Your Computer 8

CHAPTER 2: BATTERY PACK 9
Removing the Battery Pack 11
Replacing the Battery Pack 11

CHAPTER 3: COMPARTMENT DOOR 12
Removing the Compartment Door 14
Replacing the Compartment Door 14

CHAPTER 4: HARD DRIVE(S) 15
Removing the Hard Drive(s) 17
Replacing the Hard Drive(s) 19

CHAPTER 5: PROCESSOR THERMAL FAN 20
Removing the Processor Thermal Fan 22
Replacing the Processor Thermal Fan 22

CHAPTER 6: COIN-CELL BATTERY 23
Removing the Coin-Cell Battery 25
Replacing the Coin-Cell Battery 25

CHAPTER 7: MEMORY MODULE(S) 26
Removing the Memory Module(s) 28
Replacing the Memory Module(s) 29

CHAPTER 8: CENTER CONTROL COVER 31
Removing the Center Control Cover 33
Replacing the Center Control Cover 35

CHAPTER 9: KEYBOARD 36
Removing the Keyboard 38
Replacing the Keyboard 39

CHAPTER 10: PALM REST 40
Removing the Palm Rest 42
Replacing the Palm Rest 44

CHAPTER 11: BRACKETS 45
Removing the Brackets 47
Replacing the Brackets 47

CHAPTER 12: MAGNESIUM COVER 48
Removing the Magnesium Cover 50
Replacing the Magnesium Cover 52

CHAPTER 13: DISPLAY 53
Removing the Display Assembly 55
Replacing the Display Assembly 56
Removing the Display Back Cover 57
Replacing the Display Back Cover 59
Removing the AlienHead Board 60
Replacing the AlienHead Board 61

CHAPTER 14: INPUT/OUTPUT BOARD 62
Removing the Input/Output Board 64
Replacing the Input/Output Board 66

CHAPTER 15: OPTICAL DRIVE 67
Removing the Optical Drive 69
Replacing the Optical Drive 71

CHAPTER 16: WIRELESS MINI-CARD(S) 72
Removing the Mini-Card(s) 74
Replacing the Mini-Card(s) 76

CHAPTER 17: PROCESSOR HEAT SINK 77
Removing the Processor Heat Sink 79
Replacing the Processor Heat Sink 80

CHAPTER 18: PROCESSOR 81
Removing the Processor 83
Replacing the Processor 84

CHAPTER 19: GRAPHICS CARD(S) 85
Removing the Graphics Card(s) 87
Replacing the Graphics Card(s) 89

CHAPTER 20: GRAPHICS CARD FAN(S) 90
Removing the Graphics Card Fan(s) 92
Replacing the Graphics Card Fan(s) 93

CHAPTER 21: GRAPHICS CARD BLANK 94
Removing the Graphics Card Blank 96
Replacing the Graphics Card Blank 97

CHAPTER 22: SYSTEM BOARD. 98
Removing the System Board. 100
Replacing the System Board 102

CHAPTER 23: SPEAKERS. 103
Removing the Speakers 105
Replacing the Speakers. 105

CHAPTER 24: CONSUMER IR BOARD 106
Removing the Consumer IR Board. 108
Replacing the Consumer IR Board 108

CHAPTER 25: BATTERY LATCH ASSEMBLY 109
Removing the Battery Latch Assembly 111
Replacing the Battery Latch Assembly 111

CHAPTER 26: BIOS 112
Configuring the BIOS 113
Flashing the BIOS 118

CHAPTER 1: BEFORE YOU BEGIN

This section provides procedures for removing and installing the components in your computer. Unless otherwise noted, each procedure assumes that the following conditions exist:

- You have performed the steps in "Turning Off Your Computer" on page 7 and "Before Working Inside Your Computer" on page 8.
- You have read the safety information that shipped with your computer.
- A component can be replaced or—if purchased separately—installed by performing the removal procedure in reverse order.

Recommended Tools

The procedures in this document may require the following tools:

- Small flat-blade screwdriver
- Phillips screwdriver

Turning Off Your Computer

CAUTION: To avoid losing data, save and close all open files and exit all open programs before you turn off your computer.

1. Save and close all open files and exit all open programs.
2. Shut down the operating system; click **Start**, and click **Shut Down**. The computer turns off after the operating system shutdown process finishes.
3. Ensure that the computer is turned off. If your computer did not automatically turn off when you shut down the operating system, press and hold the power button until the computer turns off.

Before Working Inside Your Computer

Use the following safety guidelines to help protect your computer from potential damage and to help to ensure your own personal safety.

WARNING: Before you begin any of the procedures in this section, follow the safety instructions that shipped with your computer. For additional safety best practices information, see the Regulatory Compliance Homepage at www.dell.com/regulatory_compliance.

CAUTION: Handle components and cards with care. Do not touch the components or contacts on a card. Hold a card by its edges. Hold a component such as a processor by its edges, not by its pins.

CAUTION: Only a certified service technician should perform repairs on your computer. Damage due to servicing that is not authorized by Dell is not covered by your warranty.

CAUTION: When you disconnect a cable, pull on its connector or on its pull-tab, not on the cable itself. Some cables have connectors with locking tabs; if you are disconnecting this type of cable, press in on the locking tabs before you disconnect the cable. As you pull connectors apart, keep them evenly aligned to avoid bending any connector pins. Also, before you connect a cable, ensure that both connectors are correctly oriented and aligned.

CAUTION: To avoid damaging the computer, perform the following steps before you begin working inside the computer.

1. Ensure that the work surface is flat and clean to prevent the computer cover from being scratched.
2. Turn off your computer (see "Turning Off Your Computer" on page 7).

CAUTION: To disconnect a network cable, first unplug the cable from your computer and then unplug the cable from the network device.

3. Disconnect all telephone or network cables from the computer.
4. Press and eject any installed cards from the ExpressCard slot and the 8-in-1 Media Card Reader.
5. Disconnect your computer and all attached devices from their electrical outlets.

CAUTION: To help prevent damage to the system board, you must remove the battery from the battery bay before you service the computer.

CAUTION: To avoid damage to the computer, use only the battery designed for this particular Dell computer. Do not use batteries designed for other Dell computers.

6. Remove the battery (see "Removing the Battery Pack" on page 11).
7. Press the power button to ground the system board.

CHAPTER 2: BATTERY PACK

Battery Pack

WARNING: Before working inside your computer, read the safety information that shipped with your computer. For additional safety best practices information, see the Regulatory Compliance Homepage at www.dell.com/regulatory_compliance.

WARNING: Before performing these procedures, turn off the computer, disconnect the AC adapter from the electrical outlet and the computer, disconnect the modem from the wall connector and the computer, and remove any other external cables from the computer.

CAUTION: To avoid electrostatic discharge, ground yourself by using a wrist grounding strap or by periodically touching an unpainted metal surface (such as a connector on the back of the computer).

CAUTION: To help prevent damage to the system board, remove the main battery (see “Removing the Battery Pack” on page 11) before working inside the computer.

Removing the Battery Pack

1. Follow the instructions in “Before You Begin” on page 6.
2. Turn the computer over.
3. Slide the battery latch to the unlock position as shown.
4. The battery pack will pop up.
5. Remove the battery pack.

Replacing the Battery Pack

1. Follow the instructions in “Before You Begin” on page 6.
2. Align the battery pack tabs with the slots in the battery bay.
3. Slide the battery pack into the battery bay until the battery pack clicks into place.

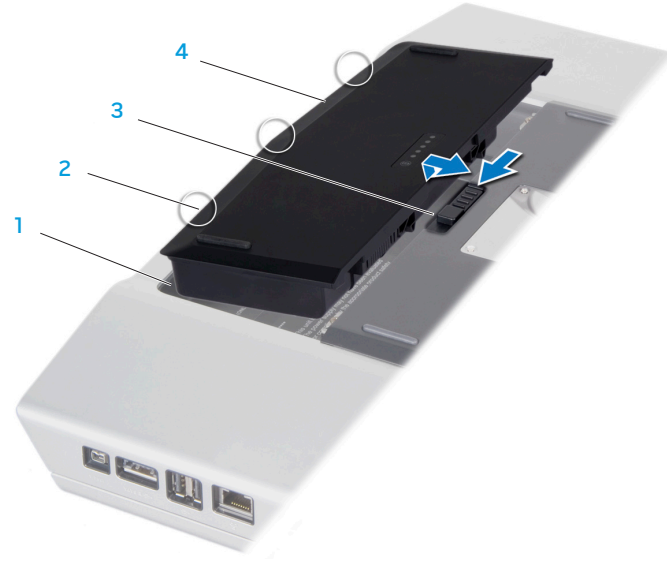

1 battery bay
2 battery pack tabs (3)
3 battery latch
4 battery pack

CHAPTER 3: COMPARTMENT DOOR

Compartment Door

WARNING: Before working inside your computer, read the safety information that shipped with your computer. For additional safety best practices information, see the Regulatory Compliance Homepage at www.dell.com/regulatory_compliance.

WARNING: Before performing these procedures, turn off the computer, disconnect the AC adapter from the electrical outlet and the computer, disconnect the modem from the wall connector and the computer, and remove any other external cables from the computer.

CAUTION: To avoid electrostatic discharge, ground yourself by using a wrist grounding strap or by periodically touching an unpainted metal surface (such as a connector on the back of the computer).

CAUTION: Only a certified service technician should perform repairs on your computer. Damage due to servicing that is not authorized by Dell™ is not covered by your warranty.

CAUTION: To help prevent damage to the system board, remove the main battery (see “Removing the Battery Pack” on page 11) before working inside the computer.

Removing the Compartment Door

1. Follow the instructions in “Before You Begin” on page 6.
2. Remove the battery pack (see “Removing the Battery Pack” on page 11).
3. Loosen the two captive screws and remove the compartment door.

Replacing the Compartment Door

1. Follow the instructions in “Before You Begin” on page 6.
2. Align the compartment door tabs with the slots on the base of the computer.
3. Place the compartment door and tighten the two captive screws.
4. Replace the battery pack (see “Replacing the Battery Pack” on page 11).

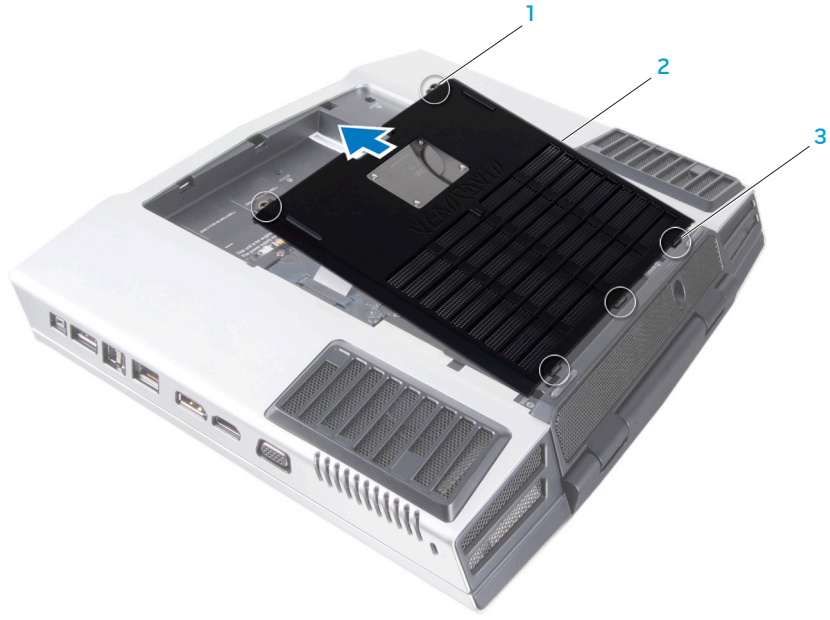

1 captive screws (2)
2 compartment door
3 compartment door tabs (3)

CHAPTER 4: HARD DRIVE(S)

Hard Drive(s)

WARNING: Before working inside your computer, read the safety information that shipped with your computer. For additional safety best practices information, see the Regulatory Compliance Homepage at www.dell.com/regulatory_compliance.

WARNING: If you remove the hard drive from the computer when the drive is hot, do not touch the metal housing of the hard drive.

CAUTION: To prevent data loss, turn off your computer (see "Turning Off Your Computer" on page 7) before removing the hard drive. Do not remove the hard drive while the computer is on or in Sleep state.

CAUTION: Hard drives are extremely fragile. Exercise care when handling the hard drive.

CAUTION: To avoid electrostatic discharge, ground yourself by using a wrist grounding strap or by periodically touching an unpainted metal surface (such as a connector on the back of the computer).

CAUTION: Only a certified service technician should perform repairs on your computer. Damage due to servicing that is not authorized by Dell™ is not covered by your warranty.

CAUTION: To help prevent damage to the system board, remove the main battery (see "Removing the Battery Pack" on page 11) before working inside the computer.

NOTE: Dell does not guarantee compatibility or provide support for hard drives from sources other than Dell or Alienware.

NOTE: If you are installing a hard drive from a source other than Dell or Alienware, you need to install an operating system, drivers, and utilities on the new hard drive.

Removing the Hard Drive(s)

1. Follow the instructions in "Before You Begin" on page 6.
2. Remove the battery pack (see "Removing the Battery Pack" on page 11).
3. Remove the compartment door (see "Removing the Compartment Door" on page 14).
4. Loosen the four captive screws that secure the primary hard drive (HDD0).
5. Using the pull tab, slide the primary hard drive (HDD0) towards the back of the hard drive bay and lift it out.

Primary Hard Drive (HDD0)

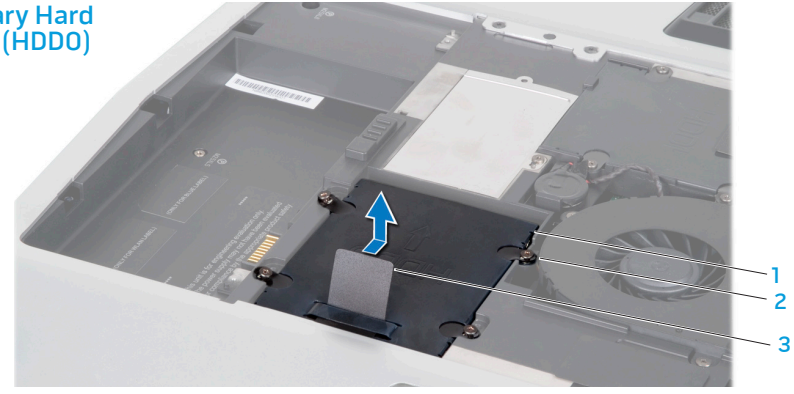

1 primary hard drive (HDD0)
2 captive screws (4)
3 pull tab

6. If your computer has a secondary hard drive (HDD1):
   a. Loosen the four captive screws on the secondary hard drive (HDD1).
   b. Using the pull tab, lift the secondary hard drive (HDD1) out of the hard drive bay.

Secondary Hard Drive (HDD1)

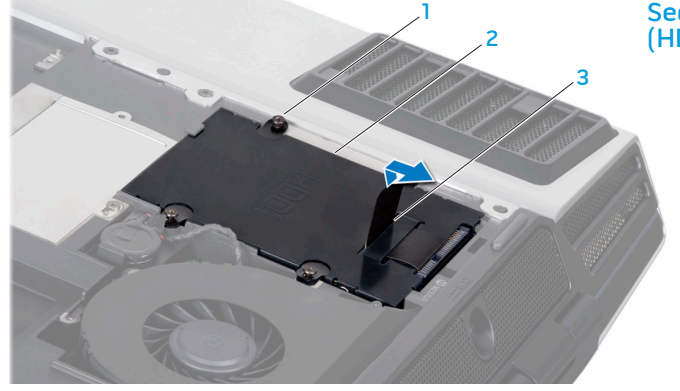

1 captive screws (4)
2 secondary hard drive (HDD1)
3 pull tab

7. Remove the four screws that secure the hard drive bracket to the hard drive.
8. Slide the hard drive out of the hard drive bracket.

1 hard drive
2 hard drive bracket
3 screws (4)

9. Remove the interposer from the hard drive, if applicable.

1 interposer
2 hard drive

Replacing the Hard Drive(s)

1. Follow the instructions in "Before You Begin" on page 6.
2. Remove the new drive from its packaging.
   Save the original packaging for storing or shipping the hard drive.

CAUTION: Use firm and even pressure to slide the drive into place. If you use excessive force, you may damage the connector.

3. Connect the interposer to the hard drive, if applicable.
4. Slide the hard drive into the hard drive bracket.
5. Replace the four screws that secure the hard drive bracket to the hard drive.
6. Place the hard drive in the hard drive bay.
   a. If your computer has a secondary hard drive (HDD1), align and tighten the four captive screws that secure the hard drive to the hard drive bay.
   b. Align and and tighten the four captive screws that secure the primary hard drive (HDD0) to the hard drive bay.
7. Replace the compartment door (see "Replacing the Compartment Door" on page 14).
8. Replace the battery pack (see "Replacing the Battery Pack" on page 11).

CAUTION: Before turning on the computer, replace all screws and ensure that no stray screws remain inside the computer. Failure to do so may result in damage to the computer.

9. Install the operating system for your computer, as needed.
10. Install the drivers and utilities for your computer, as needed.

CHAPTER 5: PROCESSOR THERMAL FAN

Processor Thermal Fan

WARNING: Before working inside your computer, read the safety information that shipped with your computer. For additional safety best practices information, see the Regulatory Compliance Homepage at www.dell.com/regulatory_compliance.

CAUTION: To avoid electrostatic discharge, ground yourself by using a wrist grounding strap or by periodically touching an unpainted metal surface (such as a connector on the back of the computer).

CAUTION: Only a certified service technician should perform repairs on your computer. Damage due to servicing that is not authorized by Dell™ is not covered by your warranty.

CAUTION: To help prevent damage to the system board, remove the main battery (see “Removing the Battery Pack” on page 11) before working inside the computer.

Removing the Processor Thermal Fan

1. Follow the instructions in "Before You Begin" on page 6.
2. Remove the battery pack (see "Removing the Battery Pack" on page 11).
3. Remove the compartment door (see "Removing the Compartment Door" on page 14).
4. Loosen the three captive screws that secure the processor thermal fan to the computer.
5. Disconnect the processor thermal fan cable from the system board connector.
6. Lift the processor thermal fan off the computer.

Replacing the Processor Thermal Fan

1. Follow the instructions in "Before You Begin" on page 6.
2. Place the processor thermal fan on the computer base.
3. Connect the processor thermal fan cable to the system board connector.
4. Tighten the three captive screws that secure the processor thermal fan to the computer base.
5. Replace the compartment door (see "Replacing the Compartment Door" on page 14).
6. Replace the battery pack (see "Replacing the Battery Pack" on page 11).

CAUTION: Before turning on the computer, replace all screws and ensure that no stray screws remain inside the computer. Failure to do so may result in damage to the computer.

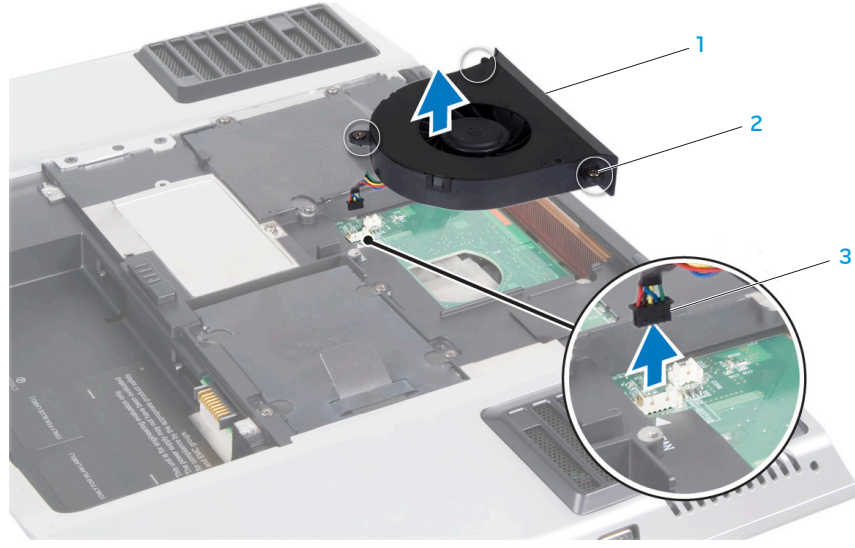

1 processor thermal fan

2 captive screws (3)

3 processor thermal fan cable connector

CHAPTER 6: COIN-CELL BATTERY

Coin-Cell Battery

WARNING: Before working inside your computer, read the safety information that shipped with your computer. For additional safety best practices information, see the Regulatory Compliance Homepage at www.dell.com/regulatory_compliance.

CAUTION: To avoid electrostatic discharge, ground yourself by using a wrist grounding strap or by periodically touching an unpainted metal surface (such as a connector on the back of the computer).

CAUTION: Only a certified service technician should perform repairs on your computer. Damage due to servicing that is not authorized by Dell™ is not covered by your warranty.

CAUTION: To help prevent damage to the system board, remove the main battery (see “Removing the Battery Pack” on page 11) before working inside the computer.

Removing the Coin-Cell Battery

1. Follow the instructions in "Before You Begin" on page 6.
2. Remove the battery pack (see "Removing the Battery Pack" on page 11).
3. Remove the compartment door (see "Removing the Compartment Door" on page 14).
4. Disconnect the coin-cell battery cable from the system board connector.
5. Lift the coin-cell battery off the computer base.

Replacing the Coin-Cell Battery

1. Follow the instructions in "Before You Begin" on page 6.
2. Place the coin-cell battery in the slot on the computer base.
3. Connect the coin-cell battery cable to the system board connector.
4. Replace the compartment door (see "Replacing the Compartment Door" on page 14).
5. Replace the battery pack (see "Replacing the Battery Pack" on page 11).

CAUTION: Before turning on the computer, replace all screws and ensure that no stray screws remain inside the computer. Failure to do so may result in damage to the computer.

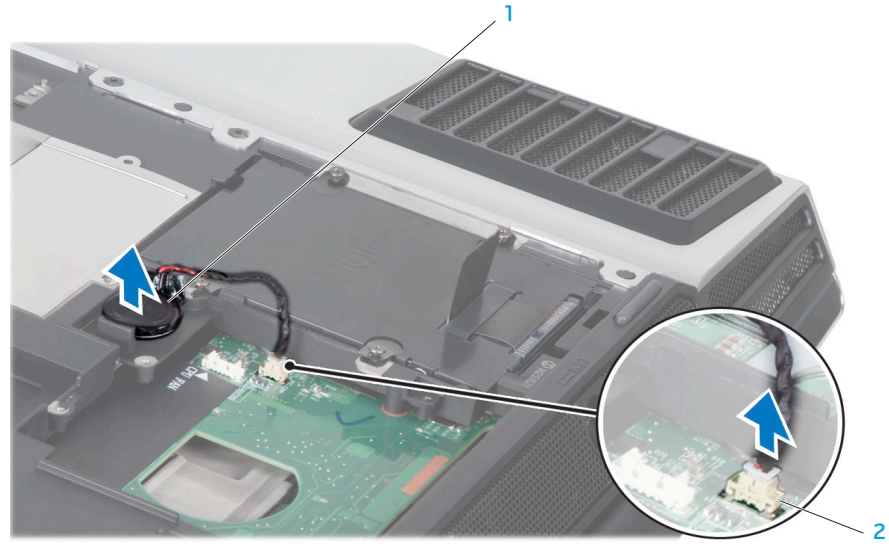

1 coin-cell battery 2 coin-cell battery cable connector

CHAPTER 7: MEMORY MODULE(S)

You can increase your computer memory by installing memory modules on the system board. See the "Basic Specifications" section in your *Mobile Manual* or in the *Comprehensive Specifications* at **support.dell.com/manuals** for information on the memory supported by your computer. Install only memory modules that are supported by your computer.

NOTE: Memory modules purchased from Dell or Alienware are covered under your computer warranty.

Your computer has two user-accessible SODIMM sockets that can be accessed from the bottom of the computer.

Memory Module(s)

WARNING: Before working inside your computer, read the safety information that shipped with your computer. For additional safety best practices information, see the Regulatory Compliance Homepage at www.dell.com/regulatory_compliance.

CAUTION: To avoid electrostatic discharge, ground yourself by using a wrist grounding strap or by periodically touching an unpainted metal surface (such as a connector on the back of the computer).

CAUTION: Only a certified service technician should perform repairs on your computer. Damage due to servicing that is not authorized by Dell™ is not covered by your warranty.

CAUTION: To help prevent damage to the system board, remove the main battery (see “Removing the Battery Pack” on page 11) before working inside the computer.

Removing the Memory Module(s)

1. Follow the instructions in "Before You Begin" on page 6.
2. Remove the battery pack (see "Removing the Battery Pack" on page 11).
3. Remove the compartment door (see "Removing the Compartment Door" on page 14).
4. Loosen the captive screw that secures the memory-module door to the computer base.
5. Slide the memory-module door to release the tabs and lift the memory-module door out of the computer base.

CAUTION: If you need to remove memory modules from both connectors, remove the memory module in the upper connector before you remove the module in the lower connector.

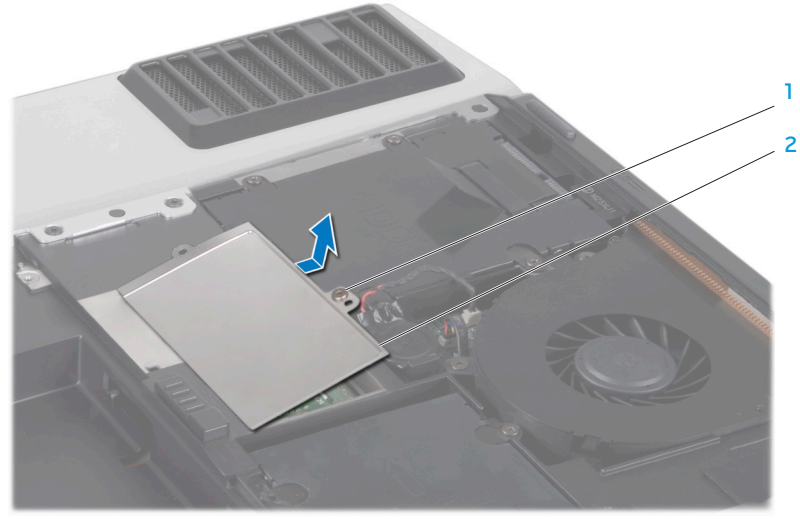

1 captive screw

2 memory-module door

6. Use your fingertips to carefully spread apart the spring-locks on the memory module connector until the module pops up.
7. Remove the memory module.

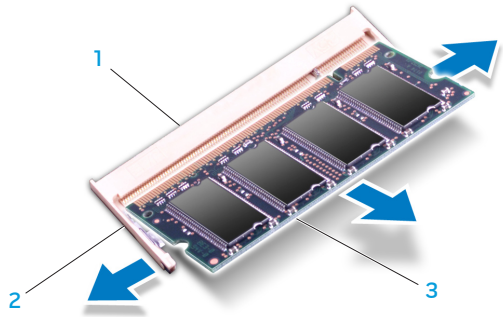

1 memory module connector
2 spring locks (2)
3 memory module

Replacing the Memory Module(s)

CAUTION: If you need to install memory modules in two connectors, install a memory module in the lower connector before you install a module in the upper connector.

1. Follow the instructions in "Before You Begin" on page 6.
2. Align the notch on the memory module with the tab on the memory module connector.
3. Insert the module into the memory module connector at a 45-degree angle, and press the module down until it clicks into place. If you do not hear the click, remove the module and reinstall it.

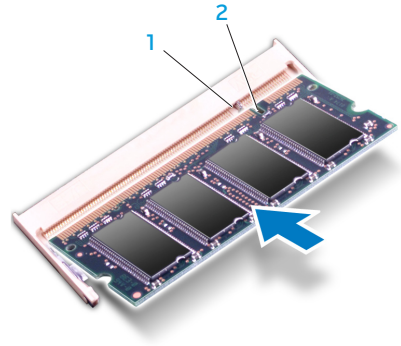

1 tab
2 notch

CAUTION: If the memory module door is difficult to close, remove the memory module and reinstall it. Forcing the memory module door to close may damage your computer.

NOTE: If the memory module is not installed properly, the computer may not boot.

4. Align and insert the memory-module door tabs into the slots on the computer base.
5. Replace and tighten the captive screw that secures the memory-module door to the computer base.
6. Replace the compartment door (see "Replacing the Compartment Door" on page 14).
7. Replace the battery pack (see "Replacing the Battery Pack" on page 11).

CAUTION: Before turning on the computer, replace all screws and ensure that no stray screws remain inside the computer. Failure to do so may result in damage to the computer.

8. Turn on the computer.
   As the computer boots, it detects the additional memory and automatically updates the system configuration information. To confirm the amount of memory installed in the computer, click **Start → Control Panel→ System and Security→ System.**

CHAPTER 8: CENTER CONTROL COVER

Center Control Cover

WARNING: Before working inside your computer, read the safety information that shipped with your computer. For additional safety best practices information, see the Regulatory Compliance Homepage at www.dell.com/regulatory_compliance.

CAUTION: To avoid electrostatic discharge, ground yourself by using a wrist grounding strap or by periodically touching an unpainted metal surface (such as a connector on the back of the computer).

CAUTION: Only a certified service technician should perform repairs on your computer. Damage due to servicing that is not authorized by Dell™ is not covered by your warranty.

CAUTION: To help prevent damage to the system board, remove the main battery (see “Removing the Battery Pack” on page 11) before working inside the computer.

Removing the Center Control Cover

1. Follow the instructions in “Before You Begin” on page 6.
2. Remove the battery pack (see “Removing the Battery Pack” on page 11).
3. Remove the compartment door (see “Removing the Compartment Door” on page 14).
4. Remove the two screws that secure the center control cover to the computer base.

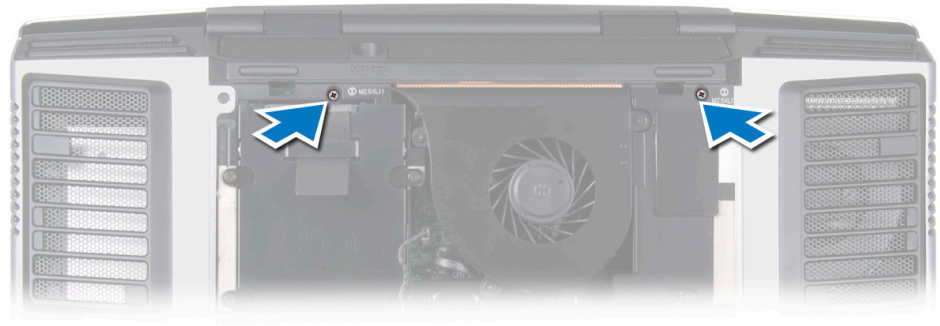

5. Turn the computer top side up, and open the display as far as it will open.

CAUTION: Be extremely careful when removing the center control cover. The center control cover along with the cable that connects it to the system board connector are very fragile.

6. Pry the center control cover up with a flat-blade screwdriver until you see the cable that connects the center control cover to the system board connector.

1 center control cover

7. Turn the center control cover as shown in the illustration.
8. Release the connector latch to disconnect the cable from the center control cover connector.
9. Lift the center control cover off the computer.

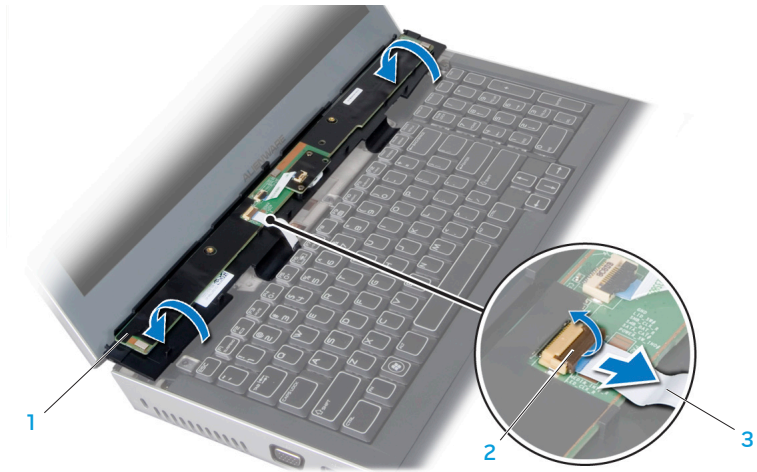

1 center control cover
2 connector latch
3 cable

Replacing the Center Control Cover

1. Follow the instructions in "Before You Begin" on page 6.
2. Slide the cable into the center control cover connector and pull down the connector latch to secure the cable to the connector.
3. Align the center control cover with the computer and snap the cover in place.
4. Turn the computer over and replace the two screws that secure the center control cover to the computer base.
5. Replace the compartment door (see "Replacing the Compartment Door" on page 14).
6. Replace the battery pack (see "Replacing the Battery Pack" on page 11).

CAUTION: Before turning on the computer, replace all screws and ensure that no stray screws remain inside the computer. Failure to do so may result in damage to the computer.

CHAPTER 9: KEYBOARD

Keyboard

WARNING: Before working inside your computer, read the safety information that shipped with your computer. For additional safety best practices information, see the Regulatory Compliance Homepage at www.dell.com/regulatory_compliance.

CAUTION: To avoid electrostatic discharge, ground yourself by using a wrist grounding strap or by periodically touching an unpainted metal surface (such as a connector on the back of the computer).

CAUTION: Only a certified service technician should perform repairs on your computer. Damage due to servicing that is not authorized by Dell™ is not covered by your warranty.

CAUTION: To help prevent damage to the system board, remove the main battery (see “Removing the Battery Pack” on page 11) before working inside the computer.

Removing the Keyboard

1. Follow the instructions in “Before You Begin” on page 6.
2. Remove the battery pack (see “Removing the Battery Pack” on page 11).
3. Remove the compartment door (see “Removing the Compartment Door” on page 14).
4. Remove the center control cover (see “Removing the Center Control Cover” on page 33).
5. Remove the five screws that secure the keyboard to the computer.

CAUTION: Be extremely careful when removing the keyboard. The keyboard along with the cables that connect it to the system board connector are very fragile.

6. Slide and lift the keyboard towards the display until the tabs come out of the slots on the chassis.

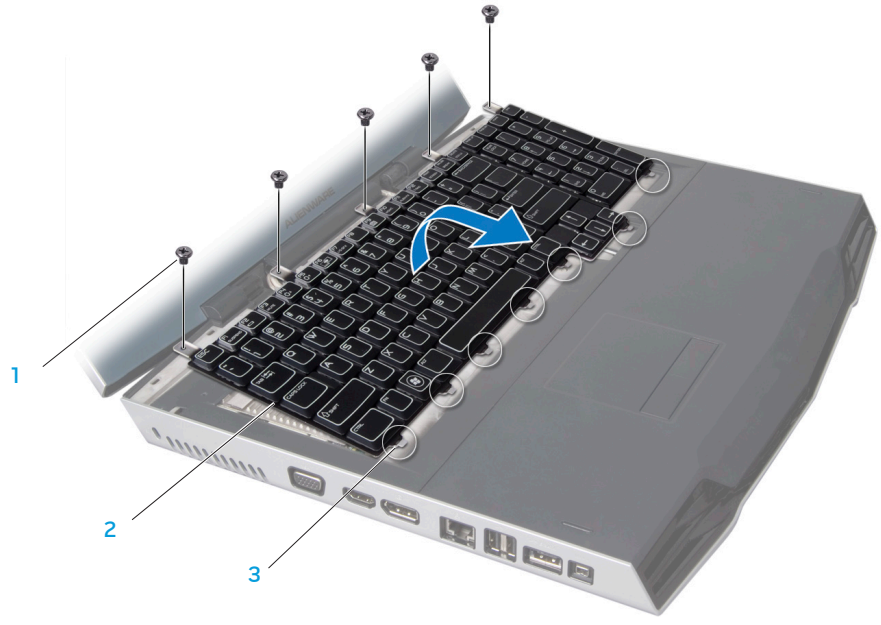

1 screws (5)
2 keyboard
3 tabs (7)

7. Turn the keyboard over.
8. Release the connector latches and disconnect the keyboard cable and keyboard light cable from the respective system board connectors.
9. Lift the keyboard off the computer.

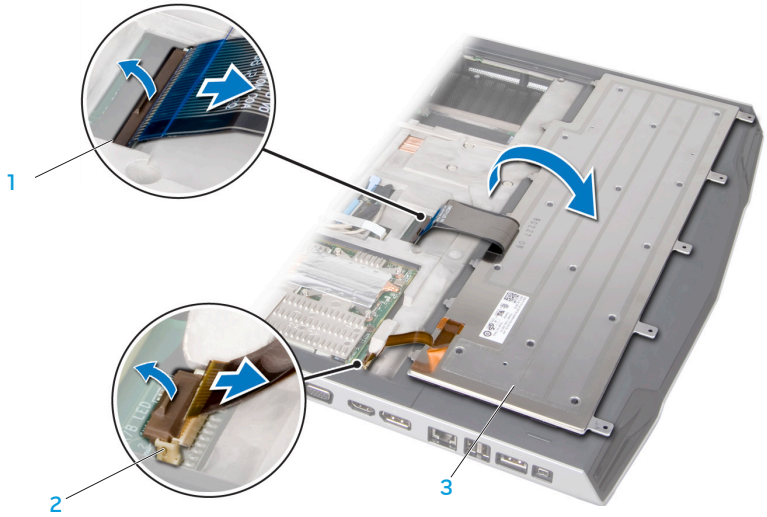

1 keyboard cable connector
2 keyboard light cable connector
3 keyboard

Replacing the Keyboard

1. Follow the instructions in “Before You Begin” on page 6.
2. Slide the keyboard cable and the keyboard light cable into the respective system board connectors and pull down the connector latches to secure the cables to the connectors.
3. Align the tabs on the keyboard with the slots on the chassis and place the keyboard on the computer.
4. Replace the five screws that secure the keyboard to the computer base.
5. Replace the center control cover (see “Replacing the Center Control Cover” on page 35).
6. Replace the compartment door (see “Replacing the Compartment Door” on page 14).
7. Replace the battery pack (see “Replacing the Battery Pack” on page 11).

△ **CAUTION: Before turning on the computer, replace all screws and ensure that no stray screws remain inside the computer. Failure to do so may result in damage to the computer.**

CHAPTER 10: PALM REST

Palm Rest

WARNING: Before working inside your computer, read the safety information that shipped with your computer. For additional safety best practices information, see the Regulatory Compliance Homepage at www.dell.com/regulatory_compliance.

CAUTION: To avoid electrostatic discharge, ground yourself by using a wrist grounding strap or by periodically touching an unpainted metal surface (such as a connector on the back of the computer).

CAUTION: Only a certified service technician should perform repairs on your computer. Damage due to servicing that is not authorized by Dell™ is not covered by your warranty.

CAUTION: To help prevent damage to the system board, remove the main battery (see “Removing the Battery Pack” on page 11) before working inside the computer.

Removing the Palm Rest

1. Follow the instructions in “Before You Begin” on page 6.
2. Remove the battery pack (see “Removing the Battery Pack” on page 11).
3. Remove the three screws that secure the palm rest to the computer base.

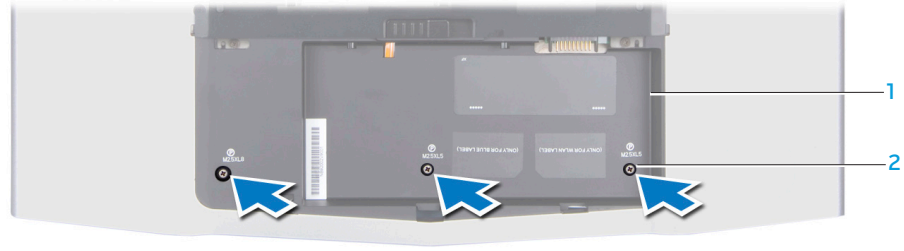

1 battery bay

2 screws (3)

4. Turn the computer over and slide the palm rest out as shown in the illustration.

CAUTION: Be extremely careful when removing the palm rest. The palm rest along with the cable that connects the touch pad to the system board connector are very fragile.

1 tabs (5)

2 palm rest

5. Ease the palm rest up until you see the cable that connects the touch pad to the system board connector.
6. Turn the palm rest over and pull the tabs on the touch pad connector to disconnect the cable from the touch pad connector.
7. Lift the palm rest off the computer.

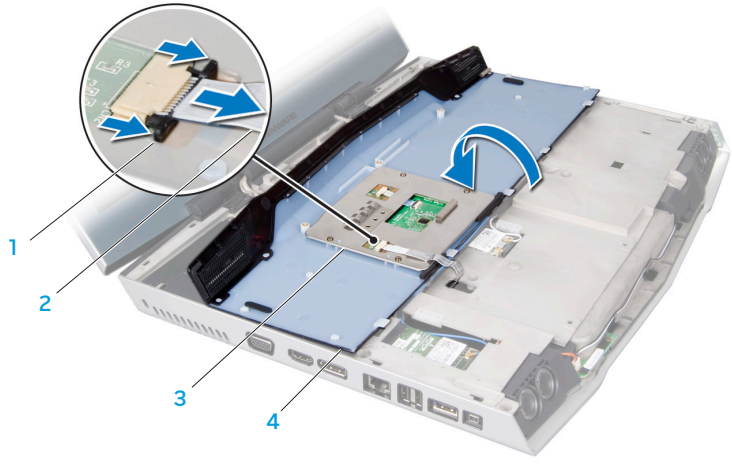

1 tabs on the touch pad connector

2 touch pad cable

3 touch pad

4 palm rest

Replacing the Palm Rest

1. Follow the instructions in "Before You Begin" on page 6.
2. Slide the touch pad cable into the touch pad connector and push the tabs on the touch pad connector to secure the cable.
3. Align the tabs on the palm rest with the slots on the computer.
4. Slide the palm rest into position.
5. Turn the computer over and replace the three screws that secure the palm rest to the computer base.
6. Replace the battery pack (see "Replacing the Battery Pack" on page 11).

CAUTION: Before turning on the computer, replace all screws and ensure that no stray screws remain inside the computer. Failure to do so may result in damage to the computer.

CHAPTER 11: BRACKETS

Brackets

WARNING: Before working inside your computer, read the safety information that shipped with your computer. For additional safety best practices information, see the Regulatory Compliance Homepage at www.dell.com/regulatory_compliance.

CAUTION: To avoid electrostatic discharge, ground yourself by using a wrist grounding strap or by periodically touching an unpainted metal surface (such as a connector on the back of the computer).

CAUTION: Only a certified service technician should perform repairs on your computer. Damage due to servicing that is not authorized by Dell™ is not covered by your warranty.

CAUTION: To help prevent damage to the system board, remove the main battery (see “Removing the Battery Pack” on page 11) before working inside the computer.

Removing the Brackets

1. Follow the instructions in "Before You Begin" on page 6.
2. Remove the battery pack (see "Removing the Battery Pack" on page 11).
3. Remove the compartment door (see "Removing the Compartment Door" on page 14).
4. Remove the center control cover (see "Removing the Center Control Cover" on page 33).
5. Remove the keyboard (see "Removing the Keyboard" on page 38).
6. Loosen the four captive screws that secure the left and right brackets to the computer base.
7. Lift the left and right brackets off the computer.

Replacing the Brackets

1. Follow the instructions in "Before You Begin" on page 6.
2. Replace the left and right brackets on the computer base.
3. Tighten the four captive screws that secure the left and right brackets to the computer base.
4. Replace the keyboard (see "Replacing the Keyboard" on page 39).
5. Replace the center control cover (see "Replacing the Center Control Cover" on page 35).
6. Replace the compartment door (see "Replacing the Compartment Door" on page 14).
7. Replace the battery pack (see "Replacing the Battery Pack" on page 11).

CAUTION: Before turning on the computer, replace all screws and ensure that no stray screws remain inside the computer. Failure to do so may result in damage to the computer.

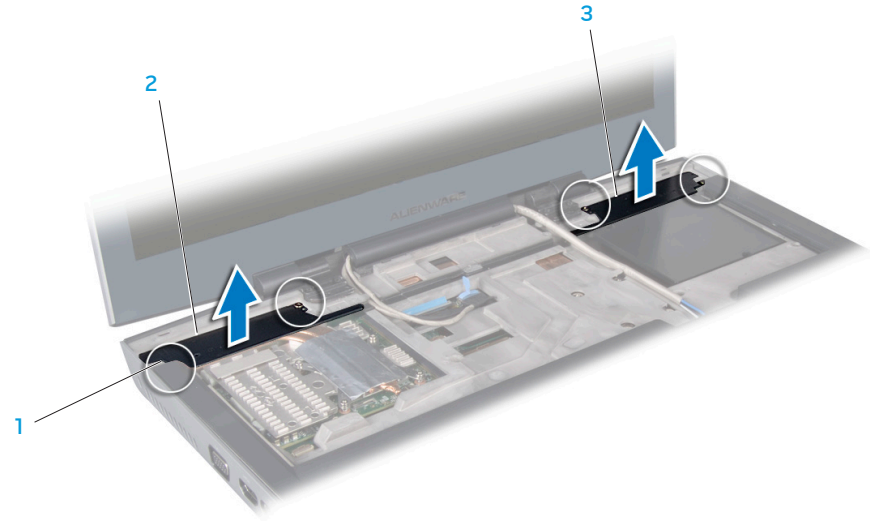

1 captive screws (4)
2 left bracket
3 right bracket

CHAPTER 12: MAGNESIUM COVER

Magnesium Cover

WARNING: Before working inside your computer, read the safety information that shipped with your computer. For additional safety best practices information, see the Regulatory Compliance Homepage at www.dell.com/regulatory_compliance.

CAUTION: To avoid electrostatic discharge, ground yourself by using a wrist grounding strap or by periodically touching an unpainted metal surface (such as a connector on the back of the computer).

CAUTION: Only a certified service technician should perform repairs on your computer. Damage due to servicing that is not authorized by Dell™ is not covered by your warranty.

CAUTION: To help prevent damage to the system board, remove the main battery (see “Removing the Battery Pack” on page 11) before working inside the computer.

Removing the Magnesium Cover

1. Follow the instructions in "Before You Begin" on page 6.
2. Remove the battery pack (see "Removing the Battery Pack" on page 11).
3. Remove the compartment door (see "Removing the Compartment Door" on page 14).
4. Remove the center control cover (see "Removing the Center Control Cover" on page 33).
5. Remove the keyboard (see "Removing the Keyboard" on page 38).
6. Remove the palm rest (see "Removing the Palm Rest" on page 42).
7. Disconnect the antenna cables from the respective Mini-Cards and remove these cables from their routing guides.
8. Disconnect the display cable and the camera cable from the respective system board connectors.

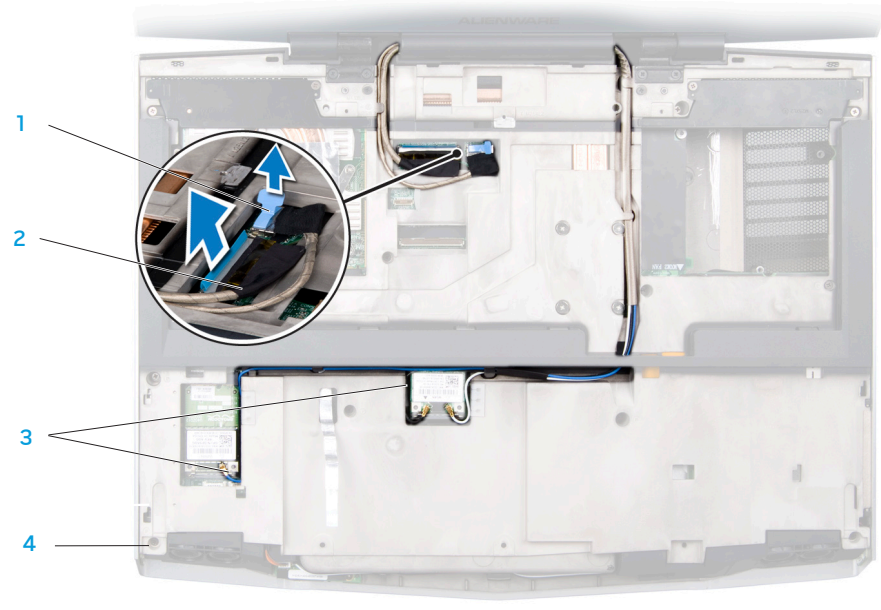

1 camera cable
2 display cable
3 Mini-Card antenna cables
4 magnesium cover

9. Remove the left and right brackets (see “Removing the Brackets” on page 47).
10. Remove the ten screws that secure the magnesium cover to the computer base.
11. Lift the magnesium cover off the computer.

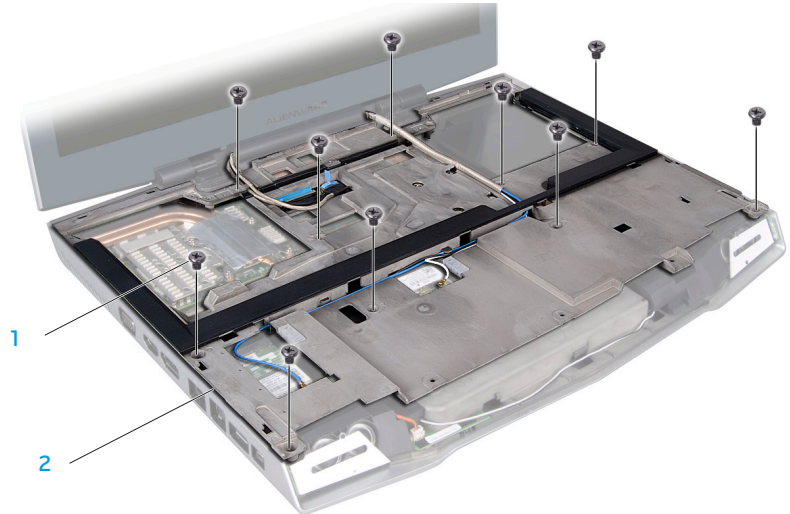

1 screws (10)

2 magnesium cover

Replacing the Magnesium Cover

1. Follow the instructions in "Before You Begin" on page 6.
2. Replace the magnesium cover on the computer base.
3. Replace the ten screws that secure the magnesium cover to the computer base.
4. Replace the left and right brackets (see "Replacing the Brackets" on page 47).
5. Route the Mini-Card antenna cables into the routing guides and connect them to the respective connectors.
6. Connect the display cable and the camera cable to the respective system board connectors.
7. Replace the palm rest (see "Replacing the Palm Rest" on page 44).
8. Replace the keyboard (see "Replacing the Keyboard" on page 39).
9. Replace the center control cover (see "Replacing the Center Control Cover" on page 35).
10. Replace the compartment door (see "Replacing the Compartment Door" on page 14).
11. Replace the battery pack (see "Replacing the Battery Pack" on page 11).

CAUTION: Before turning on the computer, replace all screws and ensure that no stray screws remain inside the computer. Failure to do so may result in damage to the computer.

CHAPTER 13: DISPLAY

Display

WARNING: Before working inside your computer, read the safety information that shipped with your computer. For additional safety best practices information, see the Regulatory Compliance Homepage at www.dell.com/regulatory_compliance.

CAUTION: To avoid electrostatic discharge, ground yourself by using a wrist grounding strap or by periodically touching an unpainted metal surface (such as a connector on the back of the computer).

CAUTION: Only a certified service technician should perform repairs on your computer. Damage due to servicing that is not authorized by Dell™ is not covered by your warranty.

CAUTION: To help prevent damage to the system board, remove the main battery (see “Removing the Battery Pack” on page 11) before working inside the computer.

CAUTION: To avoid damage to the display, you must not disassemble your Edge-to-Edge display assembly.

Display Assembly

Removing the Display Assembly

1. Follow the instructions in "Before You Begin" on page 6.
2. Remove the battery pack (see "Removing the Battery Pack" on page 11).
3. Remove the compartment door (see "Removing the Compartment Door" on page 14).
4. Remove the center control cover (see "Removing the Center Control Cover" on page 33).
5. Remove the keyboard (see "Removing the Keyboard" on page 38).
6. Remove the palm rest (see "Removing the Palm Rest" on page 42).
7. Remove the left and right brackets (see "Removing the Brackets" on page 47).
8. Remove the magnesium cover (see "Removing the Magnesium Cover" on page 50).
9. Remove the four screws (two from each hinge) that secure the display assembly to the computer base.

1 display assembly

2 screws (4)

10. Bend the display assembly towards the computer base at a 45-degree angle and lift the display assembly off the computer.

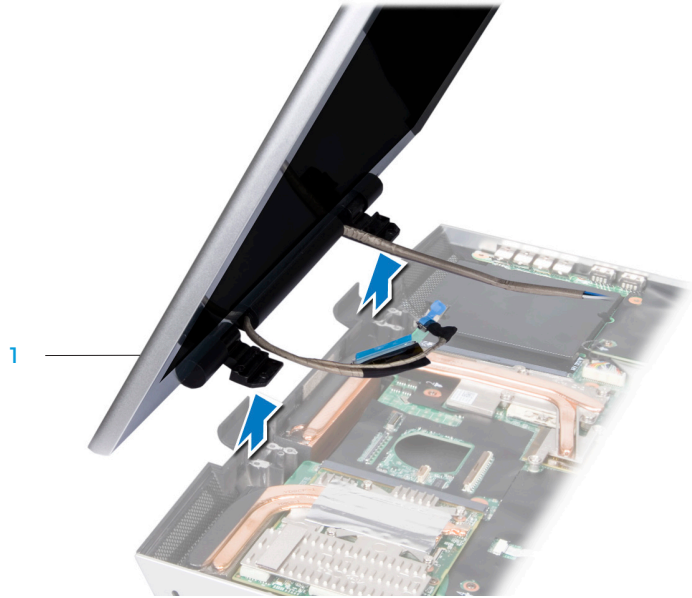

1 display assembly

Replacing the Display Assembly

1. Follow the instructions in "Before You Begin" on page 6.
2. Align the screw holes on the display hinges with the computer base.
3. Replace the four screws (two on each hinge) that secure the display assembly to the computer base.
4. Replace the magnesium cover (see "Replacing the Magnesium Cover" on page 52).
5. Replace the left and right brackets (see "Replacing the Brackets" on page 47).
6. Replace the palm rest (see "Replacing the Palm Rest" on page 44).
7. Replace the keyboard (see "Replacing the Keyboard" on page 39).
8. Replace the center control cover (see "Replacing the Center Control Cover" on page 35).
9. Replace the compartment door (see "Replacing the Compartment Door" on page 14).
10. Replace the battery pack (see "Replacing the Battery Pack" on page 11).

△ **CAUTION: Before turning on the computer, replace all screws and ensure that no stray screws remain inside the computer. Failure to do so may result in damage to the computer.**

Display Back Cover

Removing the Display Back Cover

1. Follow the instructions in “Before You Begin” on page 6.
2. Remove the battery pack (see “Removing the Battery Pack” on page 11).
3. Remove the compartment door (see “Removing the Compartment Door” on page 14).
4. Remove the center control cover (see “Removing the Center Control Cover” on page 33).
5. Remove the keyboard (see “Removing the Keyboard” on page 38).
6. Remove the palm rest (see “Removing the Palm Rest” on page 42).
7. Remove the left and right brackets (see “Removing the Brackets” on page 47).
8. Remove the magnesium cover (see “Removing the Magnesium Cover” on page 50).
9. Remove the display assembly (see “Removing the Display Assembly” on page 55).
10. Remove the two screws that secure the display back cover door to the display assembly.

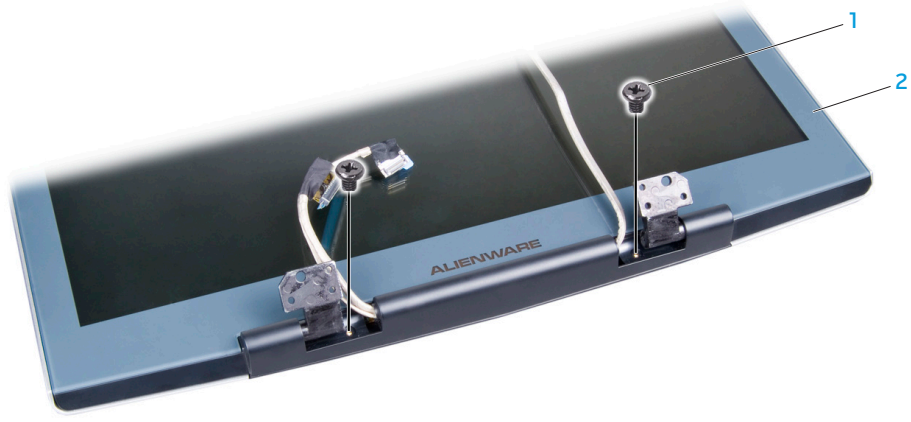

1 screws (2)

2 display assembly

11. Slide the display back cover door out and lift it off the display assembly.

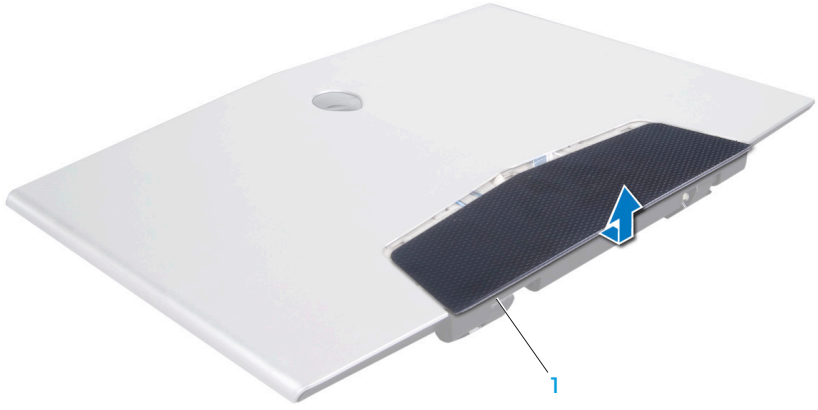

1 display back cover door

12. Remove the two screws that secure the display back cover to the display assembly.
13. Disconnect the AlienHead cable from the connector.
14. Slide the display back cover up and lift it off the display assembly.

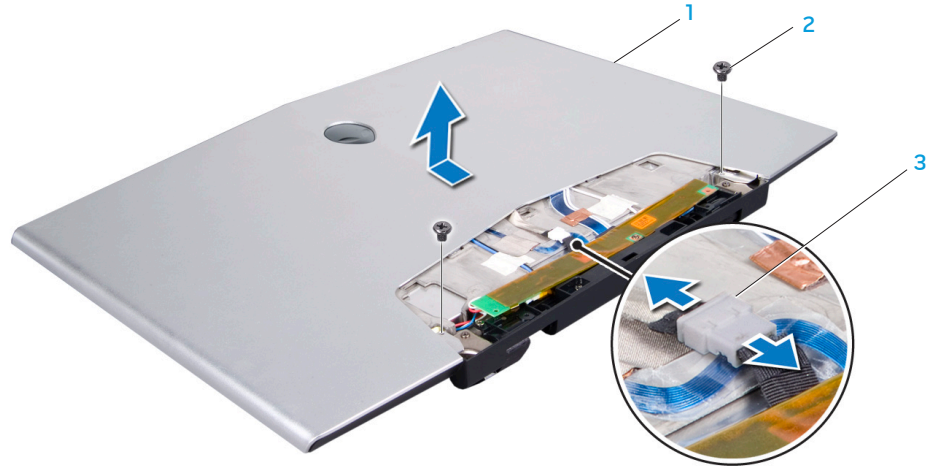

1 display back cover
2 screws (2)
3 AlienHead cable connector

Replacing the Display Back Cover

1. Follow the instructions in "Before You Begin" on page 6.
2. Align the display back cover with the back of the display assembly and slide it into position.
3. Connect the AlienHead cable to the connector.
4. Replace the two screws that secure the display back cover with the display assembly.
5. Slide the display back cover door in place.
6. Turn the display assembly over and replace the two screws that secure the display back cover door to the display assembly.
7. Replace the display assembly (see "Replacing the Display Assembly" on page 56).
8. Replace the magnesium cover (see "Replacing the Magnesium Cover" on page 52).
9. Replace the left and right brackets (see "Replacing the Brackets" on page 47).
10. Replace the palm rest (see "Replacing the Palm Rest" on page 44).
11. Replace the keyboard (see "Replacing the Keyboard" on page 39).
12. Replace the center control cover (see "Replacing the Center Control Cover" on page 35).
13. Replace the compartment door (see "Replacing the Compartment Door" on page 14).
14. Replace the battery pack (see "Replacing the Battery Pack" on page 11).

CAUTION: Before turning on the computer, replace all screws and ensure that no stray screws remain inside the computer. Failure to do so may result in damage to the computer.

AlienHead Board

Removing the AlienHead Board

1. Follow the instructions in "Before You Begin" on page 6.
2. Remove the battery pack (see "Removing the Battery Pack" on page 11).
3. Remove the compartment door (see "Removing the Compartment Door" on page 14).
4. Remove the center control cover (see "Removing the Center Control Cover" on page 33).
5. Remove the keyboard (see "Removing the Keyboard" on page 38).
6. Remove the palm rest (see "Removing the Palm Rest" on page 42).
7. Remove the left and right brackets (see "Removing the Brackets" on page 47).
8. Remove the magnesium cover (see "Removing the Magnesium Cover" on page 50).
9. Remove the display assembly (see "Removing the Display Assembly" on page 55).
10. Remove the display back cover (see "Removing the Display Back Cover" on page 57).
11. Turn the display back cover over.
12. Remove the screw that secures the AlienHead board to the display back cover.
13. Lift the top of the AlienHead board and slide the bottom portion down to detach it from the tab that holds it in place.
14. Lift the AlienHead board off the display back cover.

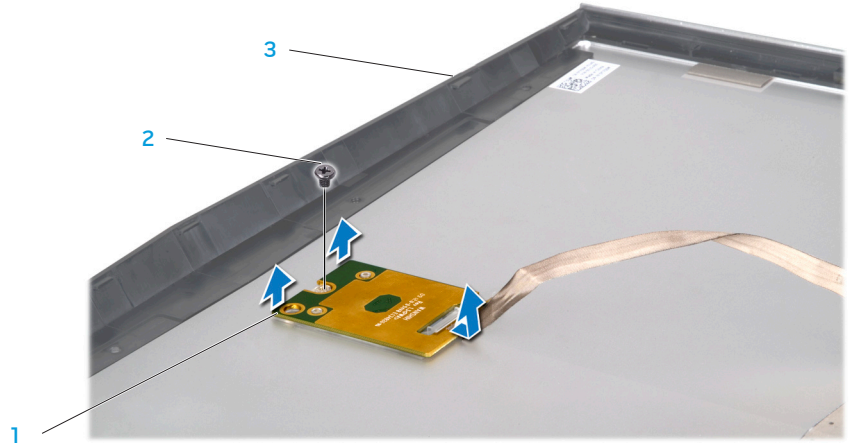

1 AlienHead board
2 screw
3 display back cover

Replacing the AlienHead Board

1. Follow the instructions in "Before You Begin" on page 6.
2. Align the AlienHead board with the tabs on the display back cover. Gently press and slide the AlienHead board into place.
3. Replace the screw that secures the AlienHead board to the display back cover.
4. Replace the display back cover (see "Replacing the Display Back Cover" on page 59).
5. Replace the display assembly (see "Replacing the Display Assembly" on page 56).
6. Replace the magnesium cover (see "Replacing the Magnesium Cover" on page 52).
7. Replace the left and right brackets (see "Replacing the Brackets" on page 47).
8. Replace the palm rest (see "Replacing the Palm Rest" on page 44).
9. Replace the keyboard (see "Replacing the Keyboard" on page 39).
10. Replace the center control cover (see "Replacing the Center Control Cover" on page 35).
11. Replace the compartment door (see "Replacing the Compartment Door" on page 14).
12. Replace the battery pack (see "Replacing the Battery Pack" on page 11).

CAUTION: Before turning on the computer, replace all screws and ensure that no stray screws remain inside the computer. Failure to do so may result in damage to the computer.

CHAPTER 14: INPUT/OUTPUT BOARD

Input/Output Board

WARNING: Before working inside your computer, read the safety information that shipped with your computer. For additional safety best practices information, see the Regulatory Compliance Homepage at www.dell.com/regulatory_compliance.

CAUTION: To avoid electrostatic discharge, ground yourself by using a wrist grounding strap or by periodically touching an unpainted metal surface (such as a connector on the back of the computer).

CAUTION: Only a certified service technician should perform repairs on your computer. Damage due to servicing that is not authorized by Dell™ is not covered by your warranty.

CAUTION: To help prevent damage to the system board, remove the main battery (see “Removing the Battery Pack” on page 11) before working inside the computer.

Removing the Input/Output Board

1. Follow the instructions in "Before You Begin" on page 6.
2. Remove the battery pack (see "Removing the Battery Pack" on page 11).
3. Remove the compartment door (see "Removing the Compartment Door" on page 14).
4. Remove the center control cover (see "Removing the Center Control Cover" on page 33).
5. Remove the keyboard (see "Removing the Keyboard" on page 38).
6. Remove the palm rest (see "Removing the Palm Rest" on page 42).
7. Remove the left and right brackets (see "Removing the Brackets" on page 47).
8. Remove the magnesium cover (see "Removing the Magnesium Cover" on page 50).
9. Release the connector latches on both ends of the ExpressCard cable and remove the cable.

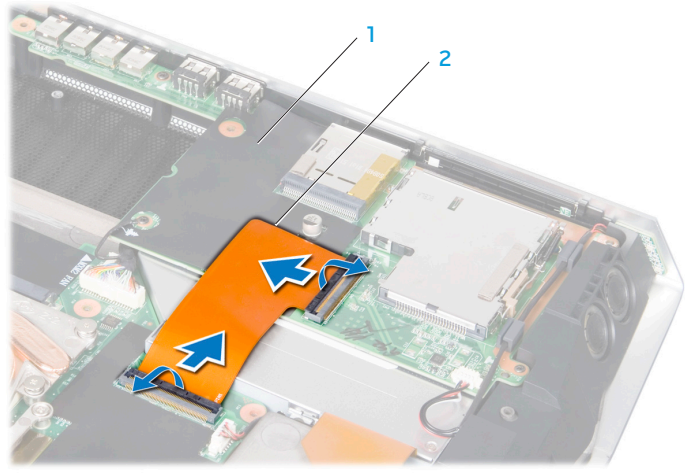

1 input/output board

2 ExpressCard cable

10. Disconnect the speaker cable, right speaker light cable, and audio cable from the respective connectors on the system board and remove the cables from the routing guides.

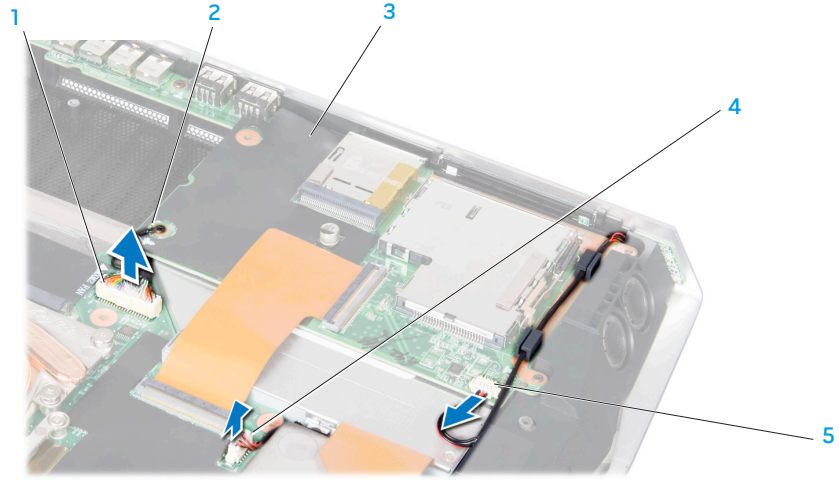

1 audio cable connector
2 earthing cable
3 input/output board
4 right speaker light cable connector
5 speaker cable connector

11. Remove the three screws that secure the input/output board to the system board and remove the earthing cable.
12. Tilt the input/output board at an angle and lift it out of the computer base.

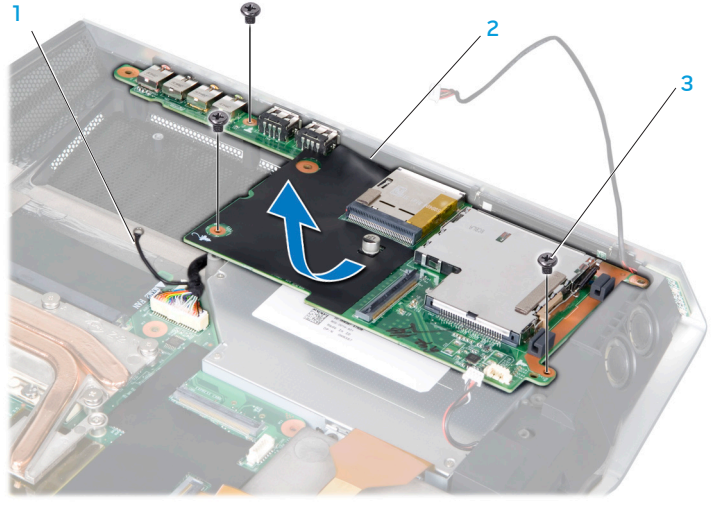

1 earthing cable
2 input/output board
3 screws (3)

Replacing the Input/Output Board

1. Follow the instructions in "Before You Begin" on page 6.
2. Place the input/output board in the computer base.
3. Replace the earthing cable and the three screws that secure the input/output board to the system board.
4. Route and connect the speaker cable, right speaker light cable, and audio cable to the respective system board connectors.
5. Slide the ExpressCard cable into the connector and pull down the connector latches at both ends of the ExpressCard cable to secure the cable to the connectors.
6. Replace the magnesium cover (see "Replacing the Magnesium Cover" on page 52).
7. Replace the left and right brackets (see "Replacing the Brackets" on page 47).
8. Replace the palm rest (see "Replacing the Palm Rest" on page 44).
9. Replace the keyboard (see "Replacing the Keyboard" on page 39).
10. Replace the center control cover (see "Replacing the Center Control Cover" on page 35).
11. Replace the compartment door (see "Replacing the Compartment Door" on page 14).
12. Replace the battery pack (see "Replacing the Battery Pack" on page 11).

CAUTION: Before turning on the computer, replace all screws and ensure that no stray screws remain inside the computer. Failure to do so may result in damage to the computer.

CHAPTER 15: OPTICAL DRIVE

Optical Drive

WARNING: Before working inside your computer, read the safety information that shipped with your computer. For additional safety best practices information, see the Regulatory Compliance Homepage at www.dell.com/regulatory_compliance.

CAUTION: To avoid electrostatic discharge, ground yourself by using a wrist grounding strap or by periodically touching an unpainted metal surface (such as a connector on the back of the computer).

CAUTION: Only a certified service technician should perform repairs on your computer. Damage due to servicing that is not authorized by Dell™ is not covered by your warranty.

CAUTION: To help prevent damage to the system board, remove the main battery (see “Removing the Battery Pack” on page 11) before working inside the computer.

Removing the Optical Drive

1. Follow the instructions in "Before You Begin" on page 6.
2. Remove the battery pack (see "Removing the Battery Pack" on page 11).
3. Remove the compartment door (see "Removing the Compartment Door" on page 14).
4. Remove the center control cover (see "Removing the Center Control Cover" on page 33).
5. Remove the keyboard (see "Removing the Keyboard" on page 38).
6. Remove the palm rest (see "Removing the Palm Rest" on page 42).
7. Remove the left and right brackets (see "Removing the Brackets" on page 47).
8. Remove the magnesium cover (see "Removing the Magnesium Cover" on page 50).
9. Remove the input/output board (see "Removing the Input/Output Board" on page 64).
10. Remove the two screws that secure the optical drive to the computer base.
11. Release the connector latch and disconnect the optical drive cable from the system board connector.

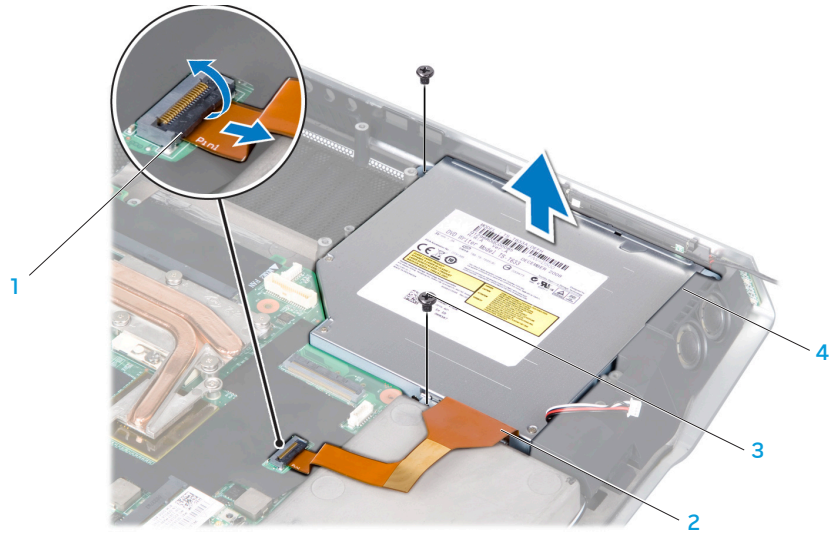

1 connector latch
2 optical drive cable
3 screws (2)
4 optical drive

12. Remove the five screws that secure the optical drive bracket to the optical drive.

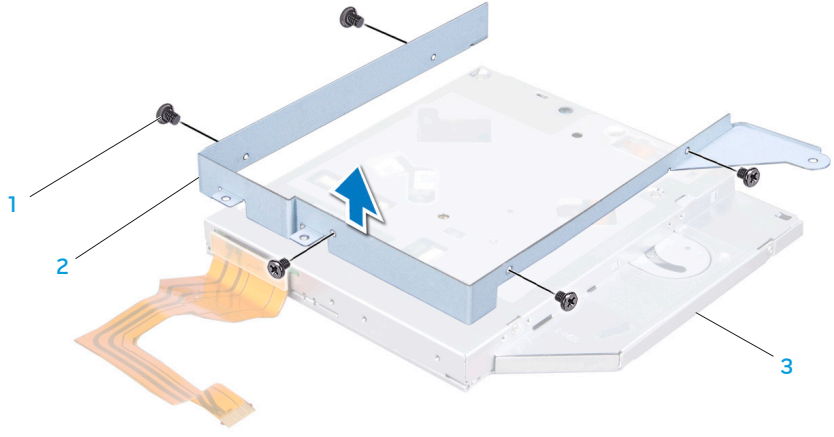

1 screws (5)
2 optical drive bracket
3 optical drive

13. Disconnect the optical drive cable from the optical drive and remove the cable.

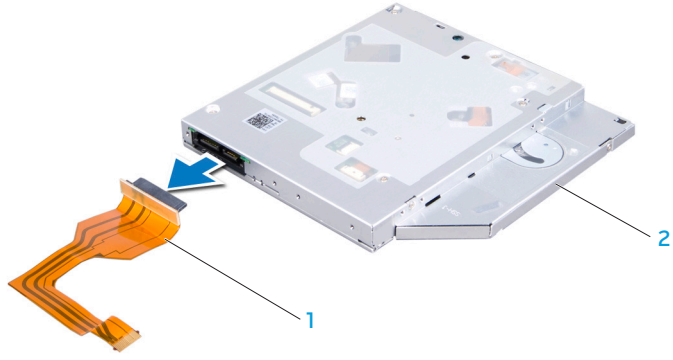

1 optical drive cable
2 optical drive

Replacing the Optical Drive

1. Follow the instructions in "Before You Begin" on page 6.
2. Connect the optical drive cable to the optical drive.
3. Replace the five screws that secure the optical drive bracket to the optical drive.
4. Place the optical drive in the computer base.
5. Slide the optical drive cable into the system board connector and pull down the connector latch to secure the cable to the connector.
6. Replace the two screws that secure the optical drive to the computer base.
7. Replace the input/output board (see "Replacing the Input/Output Board" on page 66).
8. Replace the magnesium cover (see "Replacing the Magnesium Cover" on page 52).
9. Replace the left and right brackets (see "Replacing the Brackets" on page 47).
10. Replace the palm rest (see "Replacing the Palm Rest" on page 44).
11. Replace the keyboard (see "Replacing the Keyboard" on page 39).
12. Replace the center control cover (see "Replacing the Center Control Cover" on page 35).
13. Replace the compartment door (see "Replacing the Compartment Door" on page 14).
14. Replace the battery pack (see "Replacing the Battery Pack" on page 11).

CAUTION: Before turning on the computer, replace all screws and ensure that no stray screws remain inside the computer. Failure to do so may result in damage to the computer.

CHAPTER 16: WIRELESS MINI-CARD(S)

If you ordered a wireless Mini-Card with your computer, the card is already installed.

Your computer has two Mini-Card slots:

- one Full Mini-Card slot
- one Half Mini-Card slot

The types of Mini-Cards supported are:

- Wireless Local Area Network (WLAN) — Half Mini-Card
- Wireless Personal Area Network (WPAN) or Internal Card with Bluetooth® Wireless Technology — Full Mini-Card

NOTE: Depending on the configuration of the system when it was sold, one or more of the Mini-Card slots may not have Mini-Cards installed in them.

Wireless Mini-Card(s)

WARNING: Before working inside your computer, read the safety information that shipped with your computer. For additional safety best practices information, see the Regulatory Compliance Homepage at www.dell.com/regulatory_compliance.

CAUTION: To avoid electrostatic discharge, ground yourself by using a wrist grounding strap or by periodically touching an unpainted metal surface (such as a connector on the back of the computer).

CAUTION: Only a certified service technician should perform repairs on your computer. Damage due to servicing that is not authorized by Dell™ is not covered by your warranty.

CAUTION: To help prevent damage to the system board, remove the main battery (see "Removing the Battery Pack" on page 11) before working inside the computer.

Removing the Mini-Card(s)

1. Follow the instructions in "Before You Begin" on page 6.
2. Remove the battery pack (see "Removing the Battery Pack" on page 11).
3. Remove the palm rest (see "Removing the Palm Rest" on page 42).
4. Disconnect the antenna cables from the Mini-Card(s).
5. Pull back the securing clips to release the Mini-Card(s).

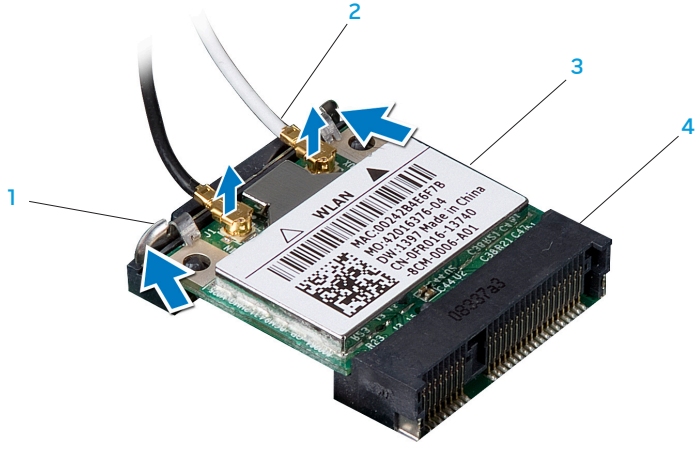

1 securing clips (2)
2 antenna cables (2 or 3)
3 WLAN Mini-Card
4 system board connector

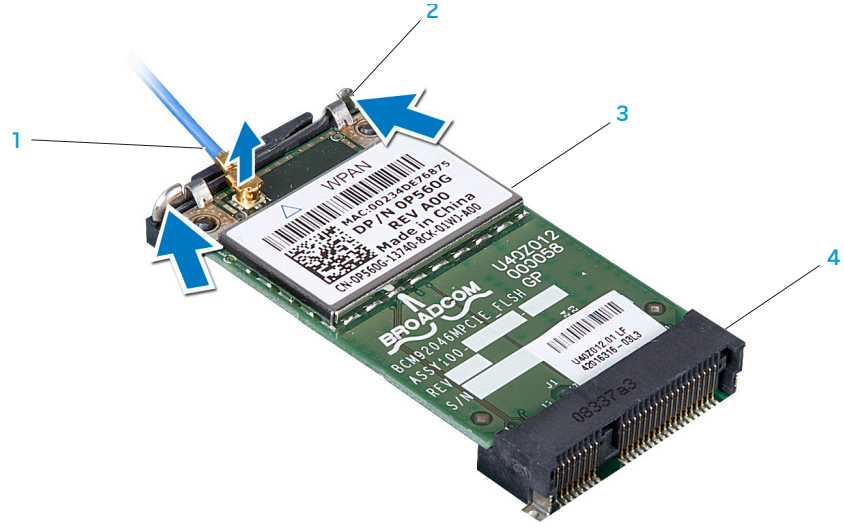

1 antenna cable
2 securing clips (2)
3 WPAN/Bluetooth Mini-Card
4 system board connector

6. Lift the Mini-Card(s) at an angle and remove it from the system board connector.

CAUTION: When the Mini-Card is not in the computer, store it in protective antistatic packaging. For more information, see "Protecting Against Electrostatic Discharge" in the safety information that shipped with your computer.

1 WLAN Mini-Card 2 system board connector

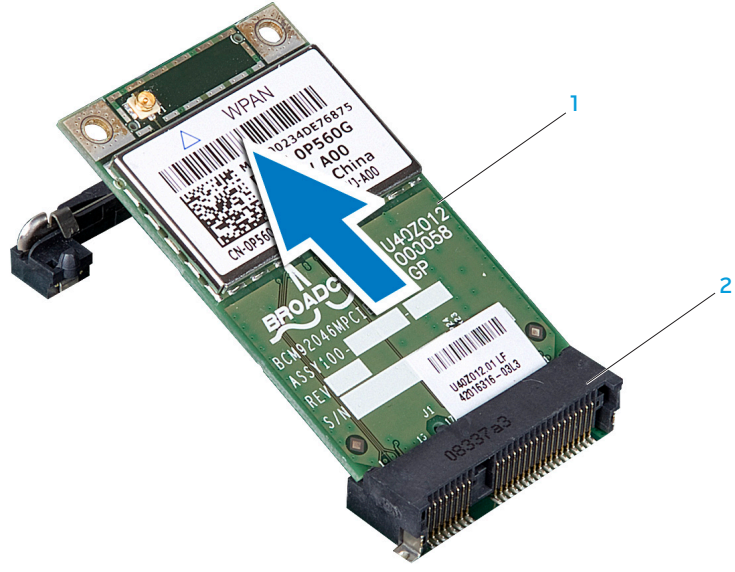

1 WPAN/Bluetooth Mini-Card 2 system board connector

Replacing the Mini-Card(s)

1. Follow the instructions in "Before You Begin" on page 6.
2. Remove the new Mini-Card from its packaging.

CAUTION: Use firm and even pressure to slide the card into place. If you use excessive force, you may damage the connector.

3. Insert the Mini-Card(s) at a 45-degree angle into the appropriate system board connector. For example, the WLAN card connector is labeled WLAN and so on.
4. Press the other end of the Mini-Card(s) down into the slot on the system board until it clicks into place.
5. Connect the appropriate antenna cables to the Mini-Card(s) you are installing. The following table provides the antenna cable color scheme for the Mini-Card supported by your computer.

Connectors on the Mini-Card	Antenna Cable Color Scheme
WLAN (2 or 3 antenna cables):	
Main WLAN (white triangle)	white
Auxiliary WLAN (black triangle)	black
MIMO WLAN (gray triangle) (optional)	gray
WPAN (one antenna cable):	
WPAN	blue

7. Secure the unused antenna cables in the protective mylar sleeve.
8. Replace the palm rest (see "Replacing the Palm Rest" on page 44).
9. Replace the battery pack (see "Replacing the Battery Pack" on page 11).

CAUTION: Before turning on the computer, replace all screws and ensure that no stray screws remain inside the computer. Failure to do so may result in damage to the computer.

10. Install the drivers and utilities for your computer, as required.

NOTE: If you are installing a communication card from a source other than Dell or Alienware, you must install the appropriate drivers and utilities.

CHAPTER 17: PROCESSOR HEAT SINK

Processor Heat Sink

WARNING: Before working inside your computer, read the safety information that shipped with your computer. For additional safety best practices information, see the Regulatory Compliance Homepage at www.dell.com/regulatory_compliance.

CAUTION: To avoid electrostatic discharge, ground yourself by using a wrist grounding strap or by periodically touching an unpainted metal surface (such as a connector on the back of the computer).

CAUTION: Only a certified service technician should perform repairs on your computer. Damage due to servicing that is not authorized by Dell™ is not covered by your warranty.

CAUTION: To help prevent damage to the system board, remove the main battery (see “Removing the Battery Pack” on page 11) before working inside the computer.

Removing the Processor Heat Sink

1. Follow the instructions in "Before You Begin" on page 6.
2. Remove the battery pack (see "Removing the Battery Pack" on page 11).
3. Remove the compartment door (see "Removing the Compartment Door" on page 14).
4. Remove the center control cover (see "Removing the Center Control Cover" on page 33).
5. Remove the keyboard (see "Removing the Keyboard" on page 38).
6. Remove the palm rest (see "Removing the Palm Rest" on page 42).
7. Remove the left and right brackets (see "Removing the Brackets" on page 47).
8. Remove the magnesium cover (see "Removing the Magnesium Cover" on page 50).
9. Loosen the six captive screws that secure the processor heat sink to the system board.
10. Lift the processor heat sink off the system board.

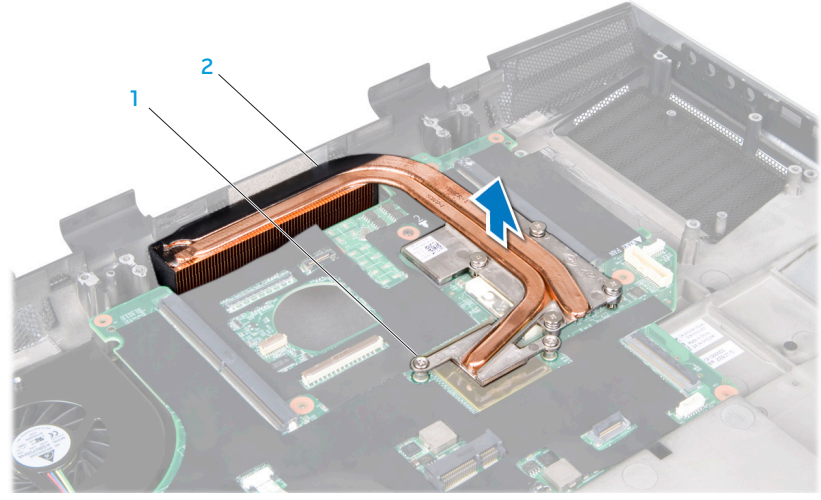

1 captive screws (6)

2 processor heat sink

Replacing the Processor Heat Sink

1. Follow the instructions in "Before You Begin" on page 6.
2. Peel the backing off the thermal cooling pads attached to the new processor heat sink.

NOTE: If the processor heat sink is replaced, the thermal cooling pads will be attached to the new processor heat sink. Do not reuse the old thermal cooling pads.

3. Place the processor heat sink on the system board.
4. Tighten the six captive screws that secure the processor heat sink to the system board.
5. Replace the magnesium cover (see "Replacing the Magnesium Cover" on page 52).
6. Replace the left and right brackets (see "Replacing the Brackets" on page 47).
7. Replace the palm rest (see "Replacing the Palm Rest" on page 44).
8. Replace the keyboard (see "Replacing the Keyboard" on page 39).
9. Replace the center control cover (see "Replacing the Center Control Cover" on page 35).
10. Replace the compartment door (see "Replacing the Compartment Door" on page 14).
11. Replace the battery pack (see "Replacing the Battery Pack" on page 11).

CAUTION: Before turning on the computer, replace all screws and ensure that no stray screws remain inside the computer. Failure to do so may result in damage to the computer.

CHAPTER 18: PROCESSOR

CHAPTER 18: PROCESSOR

Processor

WARNING: Before working inside your computer, read the safety information that shipped with your computer. For additional safety best practices information, see the Regulatory Compliance Homepage at www.dell.com/regulatory_compliance.

CAUTION: To avoid electrostatic discharge, ground yourself by using a wrist grounding strap or by periodically touching an unpainted metal surface (such as a connector on the back of the computer).

CAUTION: Only a certified service technician should perform repairs on your computer. Damage due to servicing that is not authorized by Dell™ is not covered by your warranty.

CAUTION: To help prevent damage to the system board, remove the main battery (see “Removing the Battery Pack” on page 11) before working inside the computer.

Removing the Processor

1. Follow the instructions in "Before You Begin" on page 6.
2. Remove the battery pack (see "Removing the Battery Pack" on page 11).
3. Remove the compartment door (see "Removing the Compartment Door" on page 14).
4. Remove the center control cover (see "Removing the Center Control Cover" on page 33).
5. Remove the keyboard (see "Removing the Keyboard" on page 38).
6. Remove the palm rest (see "Removing the Palm Rest" on page 42).
7. Remove the left and right brackets (see "Removing the Brackets" on page 47).
8. Remove the magnesium cover (see "Removing the Magnesium Cover" on page 50).
9. Remove the processor heat sink (see "Removing the Processor Heat Sink" on page 79).

CAUTION: When removing the processor, pull it straight up. Be careful not to bend the pins on the processor.

10. To loosen the ZIF socket, use a small flat-blade screwdriver and rotate the ZIF-socket cam screw counterclockwise until it comes to the cam stop. The ZIF-socket cam screw secures the processor to the system board. Take note of the arrow on the ZIF-socket cam screw.
11. Lift the processor off the ZIF socket.

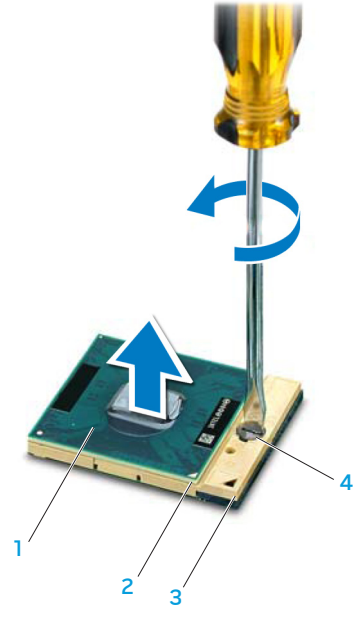

1 processor
2 pin-1 corner of processor
3 ZIF socket
4 ZIF-socket cam screw

Replacing the Processor

1. Follow the instructions in "Before You Begin" on page 6.

CAUTION: Ensure that the cam lock is in the fully open position before seating the processor. Seating the processor properly in the ZIF socket does not require force.

CAUTION: A processor that is not properly seated can result in an intermittent connection or permanent damage to the processor and ZIF socket.

2. Align the pin-1 corner of the processor so that it points to the triangle on the ZIF socket, and insert the processor into the ZIF socket.
   When the processor is correctly seated, all four corners are aligned at the same height. If one or more corners of the processor are higher than the others, the processor is not seated correctly.

CAUTION: To prevent intermittent contact between the ZIF-socket cam screw and the processor when removing or replacing the processor, press to apply slight pressure to the center of the processor while turning the cam screw.

3. Tighten the ZIF socket by turning the cam screw clockwise to secure the processor to the system board.

CAUTION: If the processor, processor fan and heat sink assembly, or system board is replaced, use the thermal cooling pads provided in the replacement kit to ensure that thermal conductivity is achieved. Do not reuse the old thermal cooling pads.

4. Peel the backing off the new thermal cooling pads in the kit and adhere the pads to the portions of the processor fan and heat sink assembly that cover the processor.
5. Replace the processor heat sink (see "Replacing the Processor Heat Sink" on page 80).
6. Replace the magnesium cover (see "Replacing the Magnesium Cover" on page 52).
7. Replace the left and right brackets (see "Replacing the Brackets" on page 47).
8. Replace the palm rest (see "Replacing the Palm Rest" on page 44).
9. Replace the keyboard (see "Replacing the Keyboard" on page 39).
10. Replace the center control cover (see "Replacing the Center Control Cover" on page 35).
11. Replace the compartment door (see "Replacing the Compartment Door" on page 14).
12. Replace the battery pack (see "Replacing the Battery Pack" on page 11).

CAUTION: Before turning on the computer, replace all screws and ensure that no stray screws remain inside the computer. Failure to do so may result in damage to the computer.

CHAPTER 19: GRAPHICS CARD(S)

Your computer may have a single graphics or dual graphics configuration. The graphics card on the left is the primary graphics card and the graphics card on the right is the secondary graphics card.

In a single graphics configuration, your computer will only have a primary graphics card.

In a dual graphics configuration, your computer will have a primary graphics card, a secondary graphics card, and a graphics cable connecting the primary and secondary graphics cards.

Graphics Card(s)

WARNING: Before working inside your computer, read the safety information that shipped with your computer. For additional safety best practices information, see the Regulatory Compliance Homepage at www.dell.com/regulatory_compliance.

CAUTION: To avoid electrostatic discharge, ground yourself by using a wrist grounding strap or by periodically touching an unpainted metal surface (such as a connector on the back of the computer).

CAUTION: Only a certified service technician should perform repairs on your computer. Damage due to servicing that is not authorized by Dell™ is not covered by your warranty.

CAUTION: To help prevent damage to the system board, remove the main battery (see “Removing the Battery Pack” on page 11) before working inside the computer.

Removing the Graphics Card(s)

1. Follow the instructions in "Before You Begin" on page 6.
2. Remove the battery pack (see "Removing the Battery Pack" on page 11).
3. Remove the compartment door (see "Removing the Compartment Door" on page 14).
4. Remove the center control cover (see "Removing the Center Control Cover" on page 33).
5. Remove the keyboard (see "Removing the Keyboard" on page 38).
6. To remove the secondary graphics card, if applicable:
   a. Remove the right bracket (see "Removing the Brackets" on page 47).
   b. Disconnect the graphics card cable from the connector on the primary graphics card.
   c. Remove the two screws that secure the secondary graphics card to the system board.
   d. Lift the secondary graphics card at an angle and remove it from the system board connector.

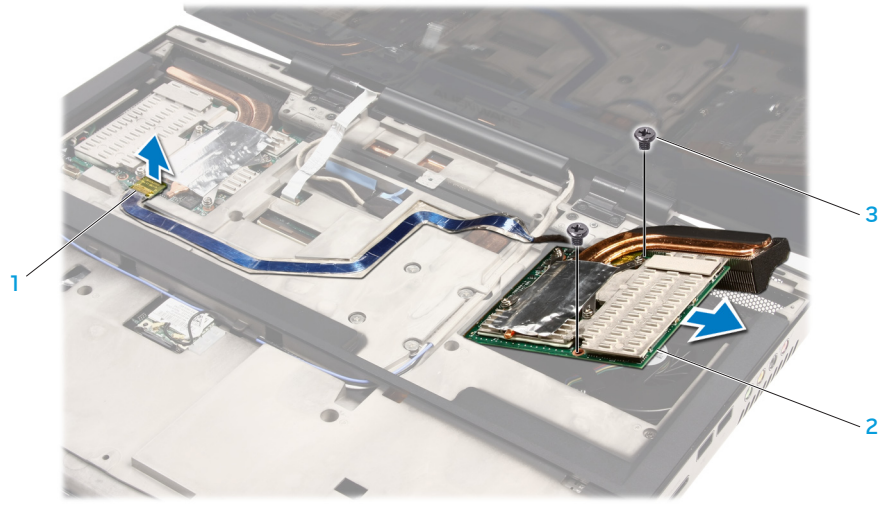

1 graphics card cable connector
2 secondary graphics card
3 screws (2)

7. To remove the primary graphics card:
   a. Remove the left bracket (see "Removing the Brackets" on page 47).
   b. Remove the two screws that secure the primary graphics card to the system board.
   c. Lift the primary graphics card at an angle and remove it from the system board connector.

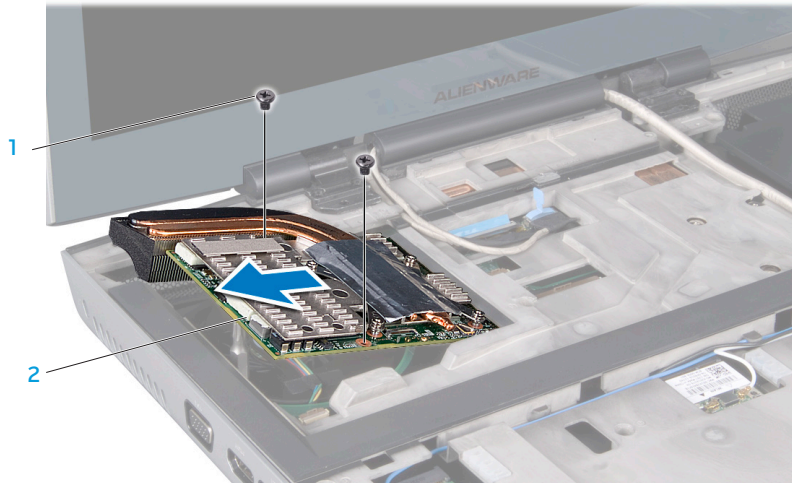

1 screws (2)

2 primary graphics card

Replacing the Graphics Card(s)

1. Follow the instructions in "Before You Begin" on page 6.
2. To replace the primary graphics card:
   a. Insert the primary graphics card at a 45-degree angle into the system board connector.
   b. Replace the two screws that secure the primary graphics card to the system board.
   c. Replace the left bracket (see "Replacing the Brackets" on page 47).
3. To replace the secondary graphics card, if applicable:
   a. Insert the secondary graphics card at a 45-degree angle into the system board connector.
   b. Replace the two screws that secure the secondary graphics card to the system board.
   c. Connect the graphics card cable to the connector on the primary graphics card.
   d. Replace the right bracket (see "Replacing the Brackets" on page 47).
4. Replace the keyboard (see "Replacing the Keyboard" on page 39).
5. Replace the center control cover (see "Replacing the Center Control Cover" on page 35).
6. Replace the compartment door (see "Replacing the Compartment Door" on page 14).
7. Replace the battery pack (see "Replacing the Battery Pack" on page 11).

CAUTION: Before turning on the computer, replace all screws and ensure that no stray screws remain inside the computer. Failure to do so may result in damage to the computer.

CHAPTER 20: GRAPHICS CARD FAN(S)

Your computer may have a single graphics or dual graphics configuration. The graphics card on the left is the primary graphics card and the graphics card on the right is the secondary graphics card. The primary graphics card will have a primary graphics card fan and the secondary graphics card will have a secondary graphics card fan.

Graphics Card Fan(s)

WARNING: Before working inside your computer, read the safety information that shipped with your computer. For additional safety best practices information, see the Regulatory Compliance Homepage at www.dell.com/regulatory_compliance.

CAUTION: To avoid electrostatic discharge, ground yourself by using a wrist grounding strap or by periodically touching an unpainted metal surface (such as a connector on the back of the computer).

CAUTION: Only a certified service technician should perform repairs on your computer. Damage due to servicing that is not authorized by Dell™ is not covered by your warranty.

CAUTION: To help prevent damage to the system board, remove the main battery (see “Removing the Battery Pack” on page 11) before working inside the computer.

Removing the Graphics Card Fan(s)

1. Follow the instructions in "Before You Begin" on page 6.
2. Remove the battery pack (see "Removing the Battery Pack" on page 11).
3. Remove the compartment door (see "Removing the Compartment Door" on page 14).
4. Remove the center control cover (see "Removing the Center Control Cover" on page 33).
5. Remove the keyboard (see "Removing the Keyboard" on page 38).
6. Remove the left bracket (see "Removing the Brackets" on page 47).
7. Remove the primary graphics card (see "Removing the Graphics Card(s)" on page 87).
8. Remove the right bracket (see "Removing the Brackets" on page 47).

NOTE: If your computer has two graphics cards, then your computer will have two graphics card fans.

9. Remove the secondary graphics card, if applicable (see "Removing the Graphics Card(s)" on page 87).
10. Loosen the three captive screws that secure the graphics card fan to the computer base.
11. Disconnect the graphics card fan cable from the system board connector.
12. Lift the graphics card fan off the computer base.

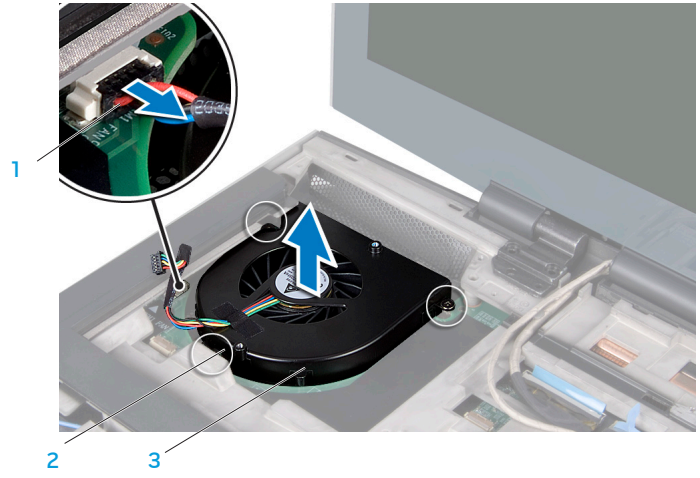

1 primary graphics card fan cable
2 captive screws (3)
3 primary graphics card fan

Replacing the Graphics Card Fan(s)

1. Follow the instructions in "Before You Begin" on page 6.
2. Place the graphics card fan in the computer base.
3. Tighten the three captive screws that secure the graphics card fan to the computer base.
4. Connect the graphics card fan cable to the system board connector.
5. Replace the primary graphics card (see "Replacing the Graphics Card(s)" on page 89).
6. Replace the left bracket (see "Replacing the Brackets" on page 47).
7. Replace the secondary graphics card, if applicable (see "Replacing the Graphics Card(s)" on page 89).
8. Replace the right bracket (see "Replacing the Brackets" on page 47).
9. Replace the keyboard (see "Replacing the Keyboard" on page 39).
10. Replace the center control cover (see "Replacing the Center Control Cover" on page 35).
11. Replace the compartment door (see "Replacing the Compartment Door" on page 14).
12. Replace the battery pack (see "Replacing the Battery Pack" on page 11).

CAUTION: Before turning on the computer, replace all screws and ensure that no stray screws remain inside the computer. Failure to do so may result in damage to the computer.

CHAPTER 21: GRAPHICS CARD BLANK

If your computer has a dual graphics configuration, the secondary graphics card is already installed on the right side of the computer base (to remove and replace the graphics card see the instructions in “Graphics Card(s)” on page 85 and “Graphics Card Fan(s)” on page 90).

If you do not have a secondary graphics card, your computer will have a graphics card blank instead.

Graphics Card Blank

WARNING: Before working inside your computer, read the safety information that shipped with your computer. For additional safety best practices information, see the Regulatory Compliance Homepage at www.dell.com/regulatory_compliance.

CAUTION: To avoid electrostatic discharge, ground yourself by using a wrist grounding strap or by periodically touching an unpainted metal surface (such as a connector on the back of the computer).

CAUTION: Only a certified service technician should perform repairs on your computer. Damage due to servicing that is not authorized by Dell™ is not covered by your warranty.

CAUTION: To help prevent damage to the system board, remove the main battery (see “Removing the Battery Pack” on page 11) before working inside the computer.

Removing the Graphics Card Blank

1. Follow the instructions in "Before You Begin" on page 6.
2. Remove the battery pack (see "Removing the Battery Pack" on page 11).
3. Remove the compartment door (see "Removing the Compartment Door" on page 14).
4. Remove the center control cover (see "Removing the Center Control Cover" on page 33).
5. Remove the keyboard (see "Removing the Keyboard" on page 38).
6. Remove the right bracket (see "Removing the Brackets" on page 47).
7. Loosen the three captive screws that secure the graphics card blank to the computer base.
8. Lift the graphics card blank off the computer base.

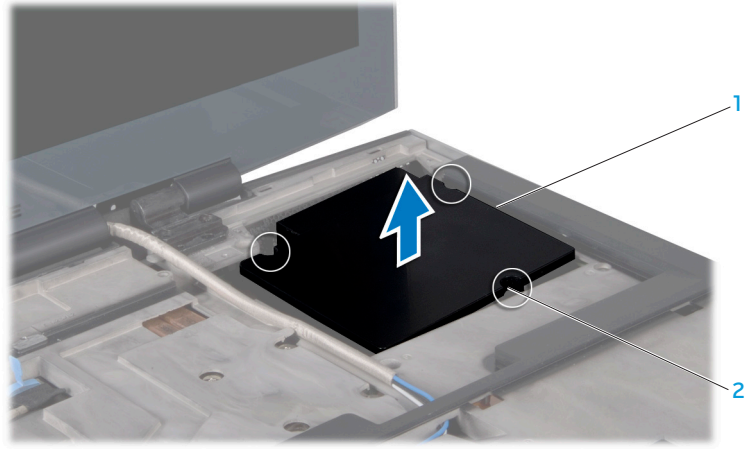

1 graphics card blank

2 captive screws (3)

Replacing the Graphics Card Blank

1. Follow the instructions in "Before You Begin" on page 6.
2. Place the graphics card blank in the computer base.
3. Tighten the three captive screws that secure the graphics card blank to the computer base.
4. Replace the right bracket (see "Replacing the Brackets" on page 47).
5. Replace the keyboard (see "Replacing the Keyboard" on page 39).
6. Replace the center control cover (see "Replacing the Center Control Cover" on page 35).
7. Replace the compartment door (see "Replacing the Compartment Door" on page 14).
8. Replace the battery pack (see "Replacing the Battery Pack" on page 11).

CAUTION: Before turning on the computer, replace all screws and ensure that no stray screws remain inside the computer. Failure to do so may result in damage to the computer.

CHAPTER 22: SYSTEM BOARD

The system board's BIOS chip contains the Service Tag, which is also visible on a barcode label on the bottom of the computer. The Service Tag has to be entered in the replacement system board's BIOS chip using the **System Setup** utility.

System Board

WARNING: Before working inside your computer, read the safety information that shipped with your computer. For additional safety best practices information, see the Regulatory Compliance Homepage at www.dell.com/regulatory_compliance.

CAUTION: To avoid electrostatic discharge, ground yourself by using a wrist grounding strap or by periodically touching an unpainted metal surface (such as a connector on the back of the computer).

CAUTION: Only a certified service technician should perform repairs on your computer. Damage due to servicing that is not authorized by Dell™ is not covered by your warranty.

CAUTION: To help prevent damage to the system board, remove the main battery (see “Removing the Battery Pack” on page 11) before working inside the computer.

CAUTION: Handle components and cards by their edges, and avoid touching pins and contacts.

Removing the System Board

1. Follow the instructions in "Before You Begin" on page 6.
2. Remove the battery pack (see "Removing the Battery Pack" on page 11).
3. Remove the compartment door (see "Removing the Compartment Door" on page 14).
4. Remove the hard drive(s) (see "Removing the Hard Drive(s)" on page 17).
5. Disconnect the processor thermal fan cable from the system board connector (see "Removing the Processor Thermal Fan" on page 22).
6. Disconnect the coin-cell battery cable from the system board connector (see "Removing the Coin-Cell Battery" on page 25).
7. Remove the memory module(s) (see "Removing the Memory Module(s)" on page 28).
8. Remove the palm rest (see "Removing the Palm Rest" on page 42).
9. Remove the center control cover (see "Removing the Center Control Cover" on page 33).
10. Remove the keyboard (see "Removing the Keyboard" on page 38).
11. Remove the left and right brackets (see "Removing the Brackets" on page 47).
12. Remove the magnesium cover (see "Removing the Magnesium Cover" on page 50).
13. Remove the input/output board (see "Removing the Input/Output Board" on page 64).
14. Remove the optical drive (see "Removing the Optical Drive" on page 69).
15. Remove the Mini-Card(s) (see "Removing the Mini-Card(s)" on page 74).
16. Remove the processor heat sink (see "Removing the Processor Heat Sink" on page 79).
17. Remove the processor (see "Removing the Processor" on page 83).
18. Remove the graphics card(s) (see "Removing the Graphics Card(s)" on page 87).
19. Disconnect the graphics card fan(s) cable from the system board connector (see "Removing the Graphics Card Fan(s)" on page 92).
20. Remove the graphics card blank, if applicable (see "Removing the Graphics Card Blank" on page 96).
21. Remove the five screws that secure the system board to the computer base.
22. Disconnect the consumer IR cable from the connectors on the system board and consumer IR board.
23. Disconnect the left speaker light cable from the system board connector.
24. Lift the system board at an angle and remove it from the computer base.

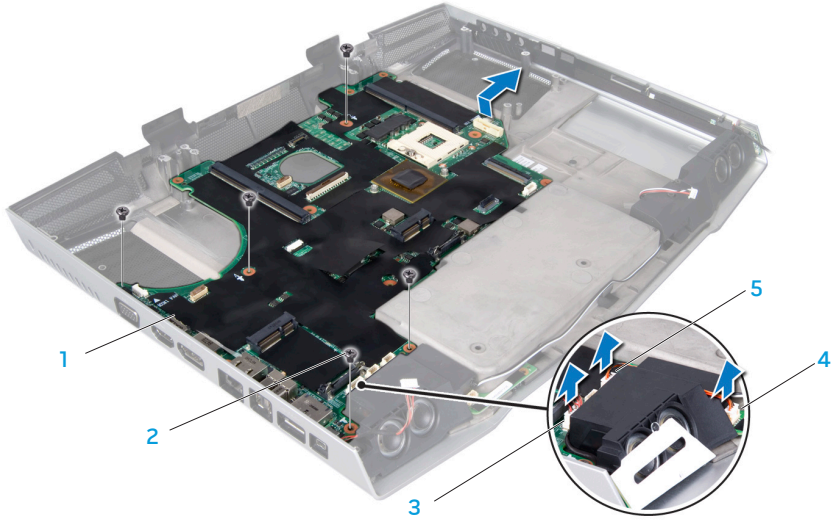

1 system board

2 screws (5)

3 left speaker light cable connector

4 consumer IR cable connector on consumer IR board

5 consumer IR cable connector on system board

Replacing the System Board

1. Follow the instructions in "Before You Begin" on page 6.
2. Align the connectors on the system board with the slots on the computer.
3. Connect the consumer IR cable to the connectors on the system board and the consumer IR board.
4. Connect the left speaker light cable to the system board connector.
5. Replace the five screws that secure the system board to the computer base.
6. Replace the graphics card blank, if applicable (see "Replacing the Graphics Card Blank" on page 96).
7. Connect the graphics card fan(s) cable to the system board connector (see "Replacing the Graphics Card Fan(s)" on page 93).
8. Replace the graphics card(s) (see "Replacing the Graphics Card(s)" on page 89).
9. Replace the processor (see "Replacing the Processor" on page 84).
10. Replace the processor heat sink (see "Replacing the Processor Heat Sink" on page 80).
11. Replace the Mini-Card(s) (see "Replacing the Mini-Card(s)" on page 76).
12. Replace the optical drive (see "Replacing the Optical Drive" on page 71).
13. Replace the input/output board (see "Replacing the Input/Output Board" on page 66).
14. Replace the magnesium cover (see "Replacing the Magnesium Cover" on page 52).
15. Replace the left and right brackets (see "Replacing the Brackets" on page 47).
16. Replace the keyboard (see "Replacing the Keyboard" on page 39).
17. Replace the center control cover (see "Replacing the Center Control Cover" on page 35).
18. Replace the palm rest (see "Replacing the Palm Rest" on page 44).
19. Replace the memory module(s) (see "Replacing the Memory Module(s)" on page 29).
20. Connect the coin-cell battery cable to the system board connector (see "Replacing the Coin-Cell Battery" on page 25).
21. Connect the processor thermal fan cable to the system board connector (see "Replacing the Processor Thermal Fan" on page 22).
22. Replace the hard drive(s) (see "Replacing the Hard Drive(s)" on page 19).
23. Replace the compartment door (see "Replacing the Compartment Door" on page 14).
24. Replace the battery pack (see "Replacing the Battery Pack" on page 11).

CAUTION: Before turning on the computer, replace all screws and ensure that no stray screws remain inside the computer. Failure to do so may result in damage to the computer.

25. Turn on the computer.

NOTE: After you have replaced the system board, enter the computer Service Tag into the BIOS of the replacement system board.

CHAPTER 23: SPEAKERS

CHAPTER 23: SPEAKERS

Speakers

WARNING: Before working inside your computer, read the safety information that shipped with your computer. For additional safety best practices information, see the Regulatory Compliance Homepage at www.dell.com/regulatory_compliance.

CAUTION: To avoid electrostatic discharge, ground yourself by using a wrist grounding strap or by periodically touching an unpainted metal surface (such as a connector on the back of the computer).

CAUTION: Only a certified service technician should perform repairs on your computer. Damage due to servicing that is not authorized by Dell™ is not covered by your warranty.

CAUTION: To help prevent damage to the system board, remove the main battery (see “Removing the Battery Pack” on page 11) before working inside the computer.

Removing the Speakers

1. Follow the instructions in "Before You Begin" on page 6.
2. Remove the system board (see "Removing the System Board" on page 99).
3. Remove the speaker cables from the routing guides.
4. Lift the speakers off the computer base.

Replacing the Speakers

1. Follow the instructions in "Before You Begin" on page 6.
2. Place the speakers on the computer base.
3. Route the speaker cables into the routing guides.
4. Replace the system board (see "Replacing the System Board" on page 102).

CAUTION: Before turning on the computer, replace all screws and ensure that no stray screws remain inside the computer. Failure to do so may result in damage to the computer.

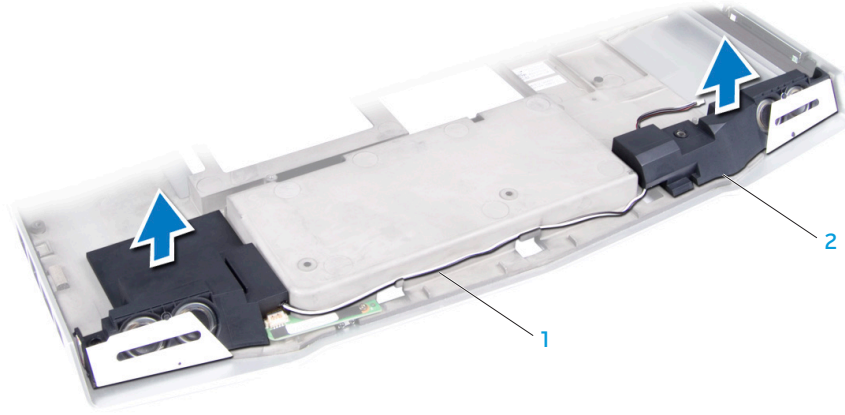

1 speaker cables 2 speakers (2)

CHAPTER 24: CONSUMER IR BOARD

Consumer IR Board

WARNING: Before working inside your computer, read the safety information that shipped with your computer. For additional safety best practices information, see the Regulatory Compliance Homepage at www.dell.com/regulatory_compliance.

CAUTION: To avoid electrostatic discharge, ground yourself by using a wrist grounding strap or by periodically touching an unpainted metal surface (such as a connector on the back of the computer).

CAUTION: Only a certified service technician should perform repairs on your computer. Damage due to servicing that is not authorized by Dell™ is not covered by your warranty.

CAUTION: To help prevent damage to the system board, remove the main battery (see “Removing the Battery Pack” on page 11) before working inside the computer.

Removing the Consumer IR Board

1. Follow the instructions in "Before You Begin" on page 6.
2. Remove the system board (see "Removing the System Board" on page 99).
3. Remove the speakers (see "Removing the Speakers" on page 105).
4. Remove the two screws that secure the consumer IR board to the computer base.
5. Lift the consumer IR board off the computer base.

Replacing the Consumer IR Board

1. Follow the instructions in "Before You Begin" on page 6.
2. Place the consumer IR board on the computer base.
3. Replace the two screws that secure the consumer IR board to the computer base.
4. Replace the speakers (see "Replacing the Speakers" on page 105).
5. Replace the system board (see "Replacing the System Board" on page 102).

CAUTION: Before turning on the computer, replace all screws and ensure that no stray screws remain inside the computer. Failure to do so may result in damage to the computer.

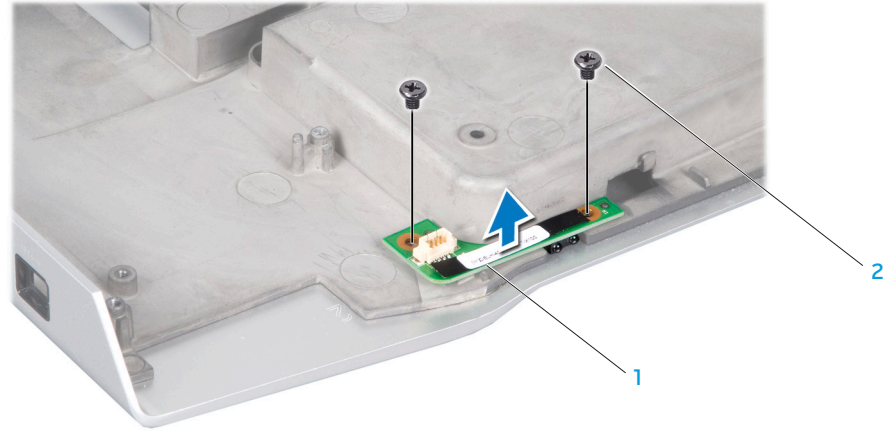

1 consumer IR board 2 screws (2)

CHAPTER 25: BATTERY LATCH ASSEMBLY

Battery Latch Assembly

WARNING: Before working inside your computer, read the safety information that shipped with your computer. For additional safety best practices information, see the Regulatory Compliance Homepage at www.dell.com/regulatory_compliance.

CAUTION: To avoid electrostatic discharge, ground yourself by using a wrist grounding strap or by periodically touching an unpainted metal surface (such as a connector on the back of the computer).

CAUTION: Only a certified service technician should perform repairs on your computer. Damage due to servicing that is not authorized by Dell™ is not covered by your warranty.

CAUTION: To help prevent damage to the system board, remove the main battery (see “Removing the Battery Pack” on page 11) before working inside the computer.

Removing the Battery Latch Assembly

1. Follow the instructions in "Before You Begin" on page 6.
2. Remove the system board (see "Removing the System Board" on page 99).
3. Press and push the plastic clip on the battery release latch to release it from the battery latch assembly.
4. Using a screwdriver, remove the latch spring from the hook on the battery latch assembly.
5. Lift the battery latch assembly out of the computer base.

Replacing the Battery Latch Assembly

1. Follow the instructions in "Before You Begin" on page 6.
2. Place the battery latch assembly in the channel in the computer base.
3. Push the plastic clips on the battery release latch into the hole on the battery latch assembly to secure the battery release latch.
4. Using a screwdriver, place the latch spring over the hook on the battery latch assembly.
   Ensure that the newly installed latch moves smoothly and freely when pushed and released.
5. Replace the system board (see "Replacing the System Board" on page 102).

CAUTION: Before turning on the computer, replace all screws and ensure that no stray screws remain inside the computer. Failure to do so may result in damage to the computer.

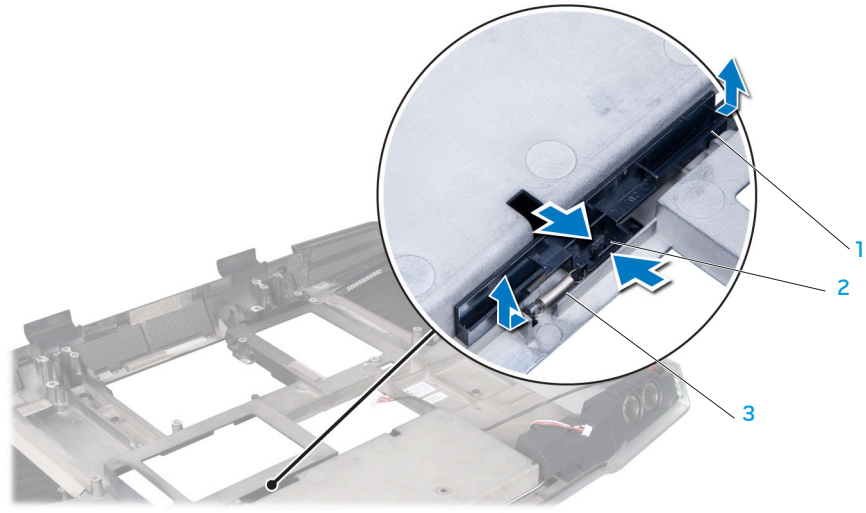

1 battery latch assembly
2 clip
3 latch spring

CHAPTER 26: BIOS

Configuring the BIOS

System Setup

The System Setup options allow you to:

- Change the system configuration information after you add, change, or remove any hardware in your laptop.
- Set or change a user-selectable option.
- View the installed amount of memory or set the type of hard drive installed.

Before you use System Setup, it is recommended that you write down the current System Setup information for future reference.

CAUTION: Do not change the settings in System Setup unless you are an expert computer user. Certain changes can cause your computer to work incorrectly.

Entering System Setup

1. Turn on (or restart) your laptop.

NOTE: Keyboard failure may result when a key on the keyboard is held down for extended periods of time. To avoid possible keyboard failure, press and release <F2> in even intervals until the System Setup screen appears.

2. While the laptop is booting, press <F2> immediately before the operating system logo appears to access the **BIOS Setup Utility**.
   If an error occurs during POST (Power On Self Test), you may also enter the **BIOS Setup Utility** by pressing <F2> when prompted.

NOTE: If you wait too long and the operating system logo appears, continue to wait until you see the Microsoft® Windows® desktop, then shut down your laptop and try again.

System Setup Screens

The **BIOS Setup Utility** window displays current or changeable configuration information for your laptop. Information is divided into five menus: **Main**, **Advanced**, **Security**, **Boot**, and **Exit**.

Key functions appear at the bottom of the **BIOS Setup Utility** window and lists keys and their functions within the active field.

System Setup Options

NOTE: Depending on your computer and installed devices, the items listed in this section may not appear, or may not appear exactly as listed.

Main Menu

System Time	Displays the system time.
System Date	Displays the system date.
Alienware	Displays the model number of your computer.
Set Service Tag	Allows you to enter your computer service tag after a system board replacement.
Service Tag	Displays the service tag of your computer.
BIOS Version	Displays the BIOS revision.
EC Version	Displays the EC firmware version.
CPU	Displays the type of processor.
CPU Speed	Displays the speed of the processor.
CPU Cache	Displays the processor cache size.
CPU ID	Displays the ID of the processor.

Main Menu

Total Memory	Displays the total memory available in your computer.
Memory Bank 0	Displays the memory size installed in memory bank 0.
Memory Bank 1	Displays the memory size installed in memory bank 1.

Advanced Menu

Wired Network	Allows you to enable or disable the on-board LAN controller. ▪ Disabled: Internal LAN is disabled and is not visible to the operating system. ▪ Enabled: Internal LAN is enabled.
Wireless Network	Allows you to enable or disable the internal wireless device. ▪ Disabled: The internal wireless device is disabled and is not visible to the operating system. ▪ Enabled: The internal wireless device is enabled.
Bluetooth Receiver	Allows you to enable or disable the internal Bluetooth device. ▪ Disabled: The internal Bluetooth device is disabled and is not visible to the operating system. ▪ Enabled: The internal Bluetooth device is enabled.

Advanced Menu	
High Definition Sound	Allows you to enable or disable the internal high definition audio device. ▪ Disabled: The internal audio device is disabled and is not visible to the operating system. ▪ Enabled: The internal audio device is enabled.
USB Emulation	Allows you to enable or disable the USB emulation feature. This feature defines how the BIOS, in the absence of a USB-aware operating system, handles USB devices. USB emulation is always enabled during POST (Power On Self Test). **NOTE:** You cannot boot any type of USB device (floppy, hard drive, or memory key) when this option is off.
Firewire	Allows you to enable or disable the IEEE 1394 A connector. ▪ Disabled: The IEEE 1394 A connector is disabled and is not visible to the operating system. ▪ Enabled: The IEEE 1394 A connector is enabled.
Performance Options	Allows you to configure fields in the Performance Options sub-menu (for more information, see "Performance Options Sub-Menu" on page 116).

Advanced Menu	
SATA Operation	Allows you to configure the operating mode of the integrated SATA hard drive controller. ▪ ATA: SATA is configured for ATA mode. ▪ AHCI: SATA is configured for AHCI mode. ▪ RAID: SATA is configured for RAID mode.
SATA Hard Drive 1	Displays the installed primary SATA hard drive model.
SATA Hard Drive 2	Displays the installed secondary SATA hard drive model.
SATA Optical Drive	Displays the installed SATA optical drive model.

Performance Options Sub-Menu

CPU Speed	Displays the speed of the processor.
Memory Frequency	Displays the frequency of the memory.
Memory Channel Mode	Displays the memory channel modes. ▪ Single ▪ Dual
CPU Performance Mode	Indicates if the processor is in turbo mode or not.
Turbo Mode	Allows you to enable or disable the turbo mode.
DDR3 Voltage	Allows you to enter the memory voltage.
CPU Vcore	Allows you to set the processor Vcore voltage.
CPU Frequency Over-Clocking	Allows you to configure the processor over-clocking frequency.

Security Menu

System Password Status	Displays the status of the system password. The system password is also known as the Master/Supervisor password. ▪ Set: The system password is enabled. ▪ Clear: The system password is disabled.
Set System Password	Allows you to set the system password. The system password controls access to the system setup utility.
User Password Status	Displays the status of the user password. ▪ Set: The user password is enabled and the built-in PS/2 compatible mouse controller is enabled. ▪ Clear: The user password is disabled and the built-in PS/2 compatible mouse controller is disabled.
Set User Password	Allows you to set the user password. The user password controls access to the computer at boot.
Enable Password on Boot	Allows you to enable or disable password entry on boot.
Failsafe	Allows you to enable or disable the Phoenix FailSafe™ security software to protect, track, and manage your laptop and your digital files if your laptop is lost or stolen.
Asset Tag	Displays the asset tag.

Power Menu

A/C Adapter Rating	Displays the AC adapter rating.
A/C Adapter Warnings	Allows you to choose if the computer should display warning messages when you use certain power adapters. The computer displays these messages if you attempt to use a power adapter that has too little capacity for your configuration.
USB Wake Support	Allows you to enable USB devices to wake the computer from standby mode or to disable the USB wake support feature.
USB Power Share	Allows you to enable USB-chargeable devices to charge when the computer is turned off or in standby mode or to disable the USB power share feature.

Boot Menu

Use the plus (+) or minus (-) keys to change the boot device priority. You can choose from:

- Hard Drive
- USB Storage
- CD\DVD\BD
- Removable Devices
- Network

Exit Menu

Exit Saving Changes	Allows you to exit System Setup and save your changes to CMOS.
Exit Discarding Changes	Allows you to exit utility without saving System Setup data to CMOS.
Load Setup Defaults	Allows you to load default values for all System Setup items.
Discard Changes	Allows you to load previous values from CMOS for all System Setup items.
Save Changes	Allows you to save System Setup data to CMOS.

Flashing the BIOS

The BIOS may require flashing when an update is available or when replacing the system board. To flash the BIOS:

1. Turn on the computer.
2. Go to **support.dell.com/support/downloads**.
3. Locate the BIOS update file for your computer:

NOTE: The Service Tag for your computer is located on a barcode label on the bottom of your computer.

- If you have your computer's Service Tag:

   a. Click **Enter a Tag**.
   b. Enter your computer's Service Tag in the **Enter a service tag:** field, click **Go**, and proceed to step 4.

- If you do not have your computer's Service Tag:

   a. Click **Select Model**.
   b. Select the type of product in the **Select Your Product Family** list.
   c. Select the product brand in the **Select Your Product Line** list.
   d. Select the product model number in the **Select Your Product Model** list.

NOTE: If you have selected a different model and want to start over again, click **Start Over** on the top right of the menu.

   e. Click **Confirm**.

4. A list of results appear on the screen. Click **BIOS**.
5. Click **Download Now** to download the latest BIOS file.
   The **File Download** window appears.
6. Click **Save** to save the file on your desktop. The file downloads to your desktop.
7. Click **Close** if the **Download Complete** window appears.
   The file icon appears on your desktop and is titled the same as the downloaded BIOS update file.
8. Double-click the file icon on the desktop and follow the procedures that appear on the screen.